GAS/LIGHT OIL BURNERS

Ecoflam
www.ecoflam-burners.com

EN

MULTICALOR 500.1 PR
MULTICALOR 600.1 PR

Technical data

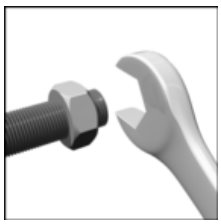

Operating instructions

Electric diagrams

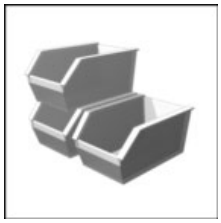

Spare parts list

Gas train manual is separate

MULTICALOR 500.1 PR TC SGT 230-400-50	3142646
MULTICALOR 500.1 PR TL SGT 230-400-50	3142647
MULTICALOR 600.1 PR TC SGT 230-400-50	3142648
MULTICALOR 600.1 PR TL SGT 230-400-50	3142649
MULTICALOR 500.1 PR TC SGT 230-400-50 NS	3143769
MULTICALOR 500.1 PR TC SGT 400-50 NS	3143292
MULTICALOR 500.1 PR TL SGT 230-400-50 NS	3142132
MULTICALOR 500.1 PR TL SGT 230-400-50 NS	3143770
MULTICALOR 500.1 PR TL S	3148241
MULTICALOR 600.1 PR TC SGT 230-400-50 NS	3143771
MULTICALOR 600.1 PR TL SGT 230-400-50 NS	3143772
MULTICALOR 600.1 PR TL S	3145773

420010463703

22-11-2021

INDEX

MULTICALOR 500.1

MULTICALOR 600.1

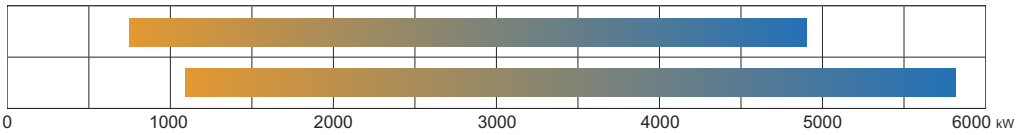

CONFORMITY DECLARATION

BURNERS DIVISION
ARISTON THERMO GROUP

DICHIARAZIONE DI CONFORMITÁ
DECLARATION OF CONFORMITY

La scrivente ditta
The writing company

ECOFLAM BRUCIATORI S.p.A.

Con sede in via Roma, 64 – Resana (TV)
Address: via Roma, 64 – Resana (TV)

DICHIARA
DECLARE

Sotto la propria responsabilità, che tutti i propri **bruciatori misti di gas-gasolio della serie DUAL… / MULTICALOR… / MULTIFLAM…** sono conformi alle seguenti Direttive, Regolamenti e Normative Europee:
*Under their sole responsibility that all the dual fuel **gas-light oil burners DUAL… / MULTICALOR… / MULTIFLAM… series** comply with requirements included in the following European Directives, Regulations and Standards:*

- **2014/35/UE "Direttiva Bassa Tensione" (Low Voltage Directive)**
- **2014/30/UE "Direttiva EMC" (EMC Directive)**
- **(EU) 2016/426 "Regolamento Apparecchi a Gas" (Gas Appliance Regulation)**
- **2006/42/EC ''Direttiva Macchine'' (Machine Directive)**
- **2011/65/UE ''Direttiva RoHS2'' (RoHS2 Directive)**
- **EN 676: 2003 + A2: 2008 + AC: 2008**
- **EN 267: 2009 + A1: 2011**
- **EN 50156-1: 2015**
- **EN 55014-1: 2016**
- **EN 55014-2: 2015**
- **EN 60335-1: 2012 + A11: 2014**
- **EN 60335-2-102: 2016**
- **EN 61000-6-2: 2016**
- **EN 61000-6-3: 2007 + A1: 2010**

Questo documento è valido dal 21/04/18 e sostituisce integralmente tutte le analoghe dichiarazioni precedentemente emesse.
This document is valid from the 21st/04/18 and replaces all the analogous previously issued declarations.

Date/Authorized Signature — *April*, 2018 / Mr. Giuliano Conticini

Title of Signatory — ***Managing Director***

ECOFLAM BRUCIATORI S.p.A.
Sede operativa:
Via Roma, 64 - 31023 Resana (TV), Italy
Tel.: +39 (0) 423 719 500
Fax. +39 (0) 423 719 580
www.ecoflam-burners.com

Sede legale:
Viale Aristide Merloni, 45 - 60044 Fabriano (AN)
P.IVA e CF 00879740264

GENERAL WARNINGS

Important notes
Ecoflam burners have been designed and built in compliance with all current regulations and directives.

All burners comply to the safety and energy saving operation regulations within the standard of their respective performance range.

The burner must not operate outside the working range.

The quality is guaranteed by a quality and management system certified in accordance with ISO 9001:2008.

MULTICALOR burners are designed for the low-pollutant combustion of natural gas or LPG with kit and light oil.

The burners comply with standard EN676. Assembly and commissioning must be carried out only by authorised specialists and all applicable guidelines and directives must be observed.

Burner description
MULTICALOR PR burners are progressive mechanical fully automatic monoblock devices. Burner head is designed to get the lowest emissions in terms of NOx and unburnt particles in order to maximize the heat generator efficiency. Emissions can be different respect to the ones recorded in the lab because they depends a lot on the generator on which the burner is fit.

The installer must comply with compulsory rules. Avoid for instance dangerous atmosphere or not ventilated rooms.

Packaging and handling
Move the burner still in its packaging using a trolley or forklift, taking care not to drop it and elevating it no more than 20cm from ground level. After having removed the packaging, check that the contents are in good condition and correspond with what was ordered. If in doubt, contact the manufacturer.

The burner must be installed by a qualified individual.

If the weight and dimensions do not allow for manual lifting, ask another operator for

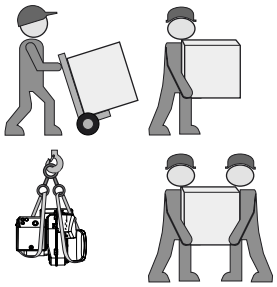

help or use a forklift, harness the burner using belts if no eyebolts are available.

Use the accessories provided (flange, gasket, pins and nuts) to install the burner onto the boiler, taking care not to damage the isolating gasket.

We can accept no warranty liability whatsoever for loss, damage or injury caused by any of the following:
- Inappropriate use.
- Incorrect assembly or repair by the customer or any third party, including the fitting of non-original parts.
- non authorised modifications made on the burner.

Provision of the system and the operating instructions
The firing system manufacturer must supply the operator of the system with operating and maintenance instructions on or before final delivery. These instructions should be displayed in a prominent location at the point of installation of the heat generator, and should include the address and telephone number of the nearest customer service centre.

Notes for the operator
The system should be inspected by a specialist at least once a year. It is advisable to take out a maintenance contract to guarantee regular servicing.

Gas lines
When installing the gas lines and gas train, the general EN676 directives and guidelines must be observed.
Additional accessories and kits shall be installed by the installer in accordance to the local safety regulations and codes of practise.

Installation location
The burner must not be operated in rooms containing aggressive vapours (e.g. spray, perchloroethylene, hydrocarbon tetrachloride, solvent, etc.) or tending to heavy dust formation or high air humidity. Adequate ventilation must be provided at the place of installation of the furnace system to ensure a reliable supply with combustion air.

Installing the gas train
The gas train is supplied separately, for fitting refer to the instructions in the gas train manual.

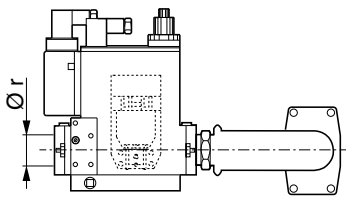

General regulations applying to the gas connection
- The gas train must only be connected to the gas mains by a recognised specialist.
- The cross-section of the gas line should be of a size designed to guarantee that the gas flow pressure does not drop below the specified level.
- A manual shut-off valve (not supplied) must be fitted upstream of the gas train.

BURNER SELECTION: Type of operation and configuration must be done by professional personnel in order to grant correct working of the burner. Installation, start-up and maintenance must be carried out by authorised specialists and all applicable guidelines and regulations (including local safety regulations and codes of practise) must be observed.

BURNER DESIGNATION

MULTICALOR 300.1 PR TC SGT 230-400-50

RANGE NAME BY FUEL TYPE

MULTICALOR	Dual fuel (Gas / Light oil)

MODEL SIZE (Gas: kW; Oil: kg/h)

MULTICALOR 300.1	300 kg/h - 3000 kW

EMISSIONS

-	Standard Class 2 - GAS EN676 (<120 mg/kWh)
-	Standard Class 1 - OIL EN267 (<250 mg/kWh)

OPERATION TYPE

PR	2 stages progressive mechanical gas / oil
MD	2 stages modulating mechanical with PID
E	2 stages modulating electronic

HEAD TYPE

TC	Short head
TL	Long head

FUEL

	Natural gas
LPG	Liquid gas
BIOGAS	Biogas

EQUIPMENT

SGT	Separate gas train

ELECTRICAL POWER SUPPLY

230-400V/50Hz	230-400 Volt, 50 Hz

MODULAR DELIVERY SYSTEM

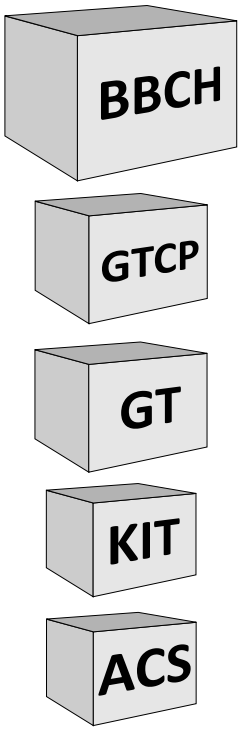

Dual fuel burners

All dual fuel burners are delivered in separate set/box, i.e. burner body including combustion head and separate gas train with separate additional kit and accessories that shall complete the gas train or the burner according to the applicable standard.
Kit and accessories are delivered separately.

Gas train - GTCP - KITS - Accessories

All gas and dual fuel burners gas trains are delivered separately in different models and configuration.
Export configuration gas train completion are available but it is mandatory for the local installer in this case to comply to the local safety regulations.
For burners over 1700 kW gas train connection pipe must be ordered.
Kits and accessories are managed and delivered separately.

Component type

BBCH	Burner Body with Combustion Head (without gas train)
GTCP	Gas Train Connection pipe
GT	Gas Train (delivered separately)

BURNER DESCRIPTION

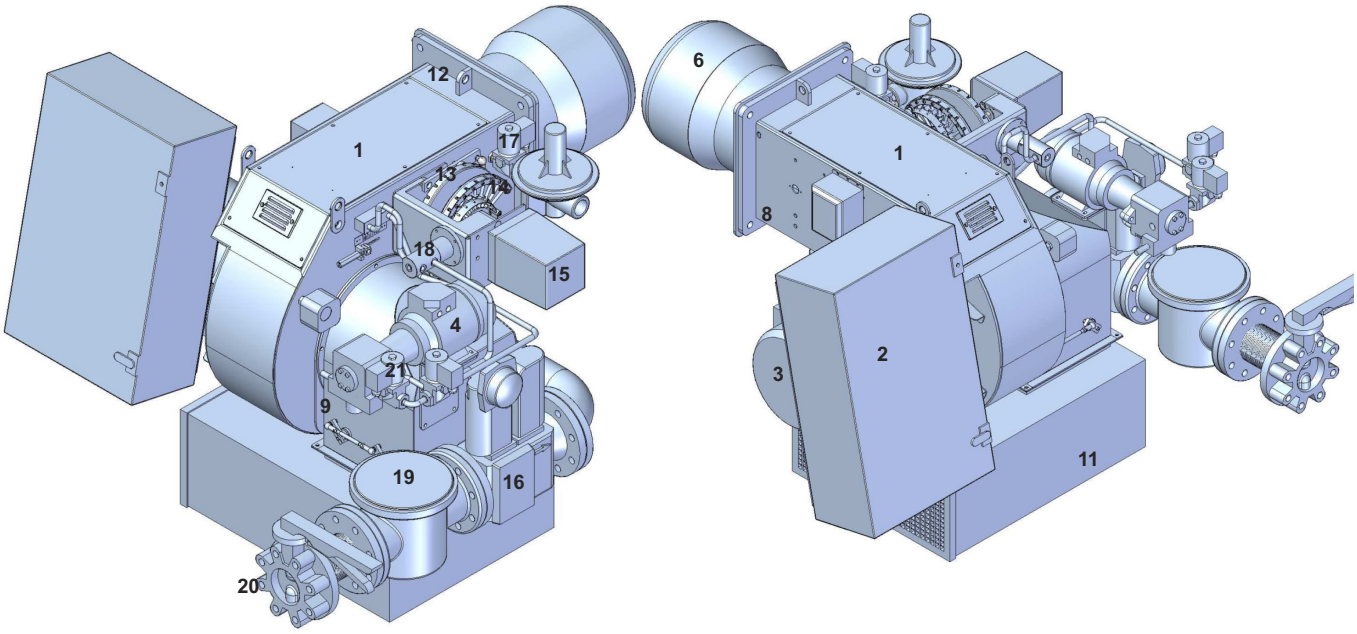

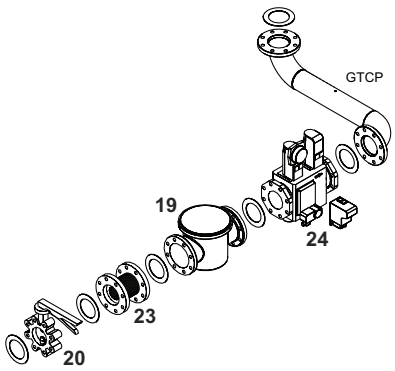

LEGEND

1. Housing
2. Electrical control panel
3. Blower motor
4. Pump and pump motor
6. Blast tube
8. Burner fixing flange
9. Air flap regulation
11. Silencer
12. Lifting eyebolts
13. Mechanical cam gas
14. Mechanical cam oil
15. Servomotor for gas and air
16. Gas train
17. Pilot gas train
18. Oil pressure regulator
19. Gas filter
20. Ball valve
21. Oil coil
23. Antivibration coupling
24. Tightness control

GTCP. Gas train connection pipe

Control panel

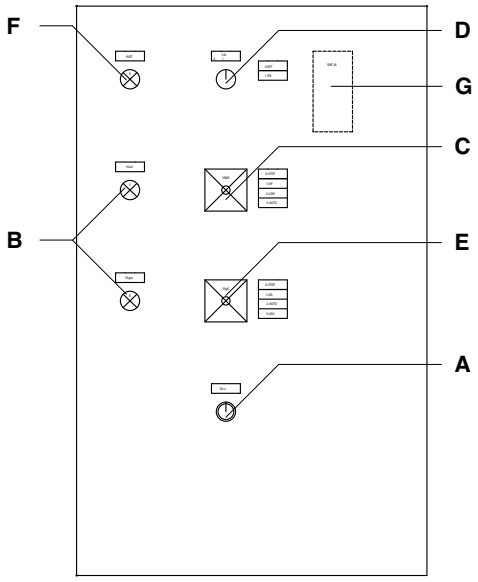

A - reset key
B - operating lamps (orange=light-oil; green= gas)
C - selector:
OUT = loking of devoices for operating at intermediate outputs
UP = operation at max. output
LOW = operation at min. output
AUTO = automatic operation

D - ON/OFF switch
E - selector:
0 = STOP
1 = light-oil operation
2 = automatic operation
3 = gas operation
F - termal lock-out lamp
G - modulating unit RWF 50 (optional)

BURNER DESCRIPTION

Gas train - Kit - Accessories: assembly to the burner

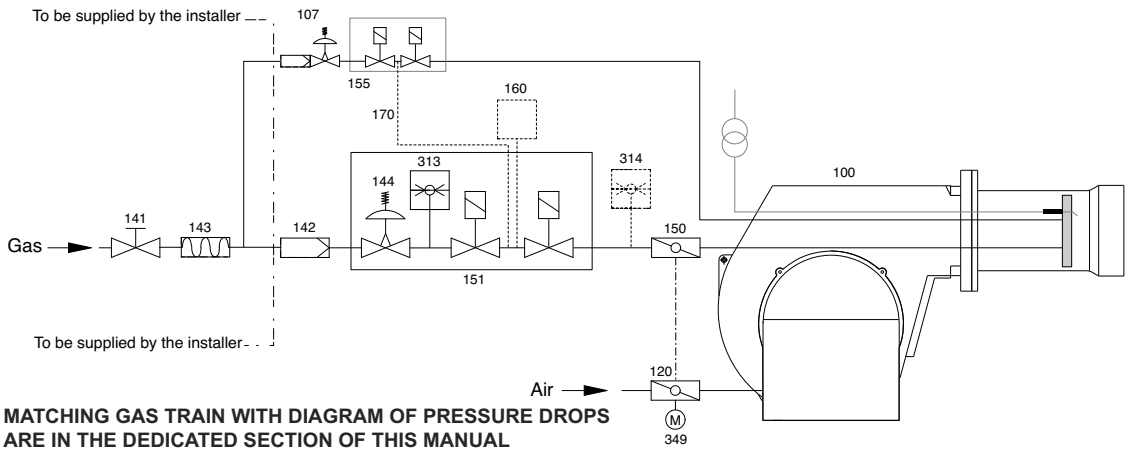

MATCHING GAS TRAIN WITH DIAGRAM OF PRESSURE DROPS ARE IN THE DEDICATED SECTION OF THIS MANUAL

Ecoflam gas trains are delivered separately for all gas and dual fuel burners and are available in different configurations:
Double gas valves with actuators and regulator VGD Siemens and min pressure switch + ACS gas filter

VGD 20.503 Rp 2" / VGD 40.065 - 40.080 - 40.100 - 40.125

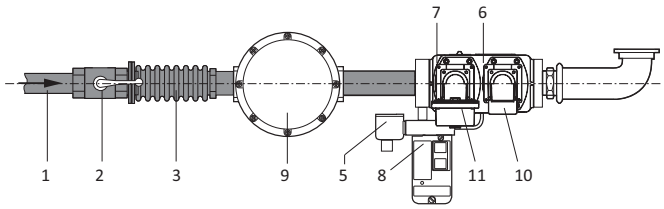

1. Main gas pipe			
2. Ball valve		ACS	
3. Antivibration coupling		ACS	
5. Min gas pressure switch	EXPORT	GAS TRAIN	EN676
6. Safety gas valve + 10. Actuator			
7. Working gas valve + 11. Actuator			
8. Gas leakage control		KITTC *	
9. Gas filter		ACS	
KIT - MAX Gas pressure switch		KITPRES	
ACS - Gas train connection pipe		GTCP **	

! **GTCP-...* WARNING:** in order to fit the gas train, the corresponding connection pipe must be ordered (GTCP size and fitting depend on the burner and the gas train selected). Upon the installer responsibility it is mandatory to install additional support(s) in order to not overload the burner body with the dead load of full gas train, accessories, piping and so on.
The burner body can stand just the gas valve and the piping between the gas valve and the body.

HOW TO INSTALL THE GAS TRAIN INTO THE BURNER AND CALCULATE THE OVERALL DIMENSIONS:
refer to the dimension page and the gas train manual for all detailed information

! **WARNING:** EN676 compulsory kit and accessories in order to comply to the safety regulations. Additional accessories and kits shall be installed by the installer in accordance to the local safety regulations and codes of practise.

Gas governor / Filter	Tightness control	Modulation Kit	Max Pressure switch	Other accessories
FGDR - FILTER	KITTC- Model	KITMD-RWF 50	KITPRES50	
Compulsory EN676	Compulsory > 1200 kW	Probe-...	KITPRES150	
	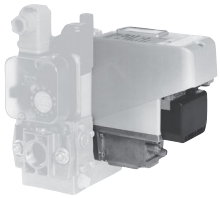		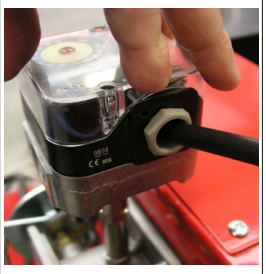	

TECHNICAL DATA

MODEL		MULTICALOR 500.1	MULTICALOR 600.1
Thermal power max.	kW	5.000	5.800
	kcal/h	4.300.000	4.988.000
	kg/h	423	490
Thermal power min.	kW	1.200	1.500
	kcal/h	1.032.000	1.290.000
	kg/h	101	126
Operation mode	Type	Progressive mechanical oil / gas - Modulating with PID	
Regulation ratio nominal	Type	1÷4 GAS - 1÷3 OIL	
Fuel	Type	G20 (L.C.V. 8.570 kcal/Nm^3), G25 (L.C.V. 7.370 kcal/Nm^3) G31 (L.C.V. 22.260 kcal/Nm^3), G30 (L.C.V. 29.320 kcal/Nm^3) Light oil (L.C.V. 10.200 kcal/kg max visc. 1,5°E at 20°C)	
Emission class	std	Standard Class 2 GAS EN676 (<120 mg/kWh) - Standard Class 1 OIL EN267 (<250 mg/kWh)	
Control unit	Type	LFL / LGK	
Gas train	GT	VGD separate gas train + Filter + KIT Tightness control + Other KIT/ACS	
Gas connection	GTCP	Gas connection range RP 50 to DN 125 depending on the gas train selected	
NATURAL GAS pressure	mbar	35÷500	50÷500
LPG pressure	mbar	65÷500	90÷500
Air regulation	Type	Air flap	Air flap
Air flap control with servomotor	Model	SQM50	
Air pressure switch	mbar	1…10 mbar	
Flame monitoring	Type	UV cell QRA	
Ignitier	Model	BRAHMA	
Motor	kW	11	15
Rpm	N°	2.800	2.800
Voltage	V/Hz	230/400 V - 50 Hz	
Total power consumption operation	W	13.500	17.500
Weight body BBCH	Kg		
Electrical panel protection level	IP	IP55	IP55
Sound pressure level without silencer	dB(A) Lab tests	91,4	92,8
Sound pressure level with silencer		85,7	86,7
Ambient temperature storage	Min/Max	-20°…+70° C	
Ambient temperature use		-10°…+60° C	
Oil pump	Model	TA4	TA4
Oil pump motor	kW	1,1	1,1
Nozzles	Type	according to the output requested	

GAS CATEGORY BY COUNTRY

Gas category	Country																								
$II_{2R,3R}$	BE	CH	CZ	DE	DK	ES	FI	FR	GB	GR	HU	IE	IT	LU	NL	PT	SE	EE	LT	LV	NO	PL	SK	SI	-
$II_{2H,3P/B}$	AT	-	-	-	-	-	-	-	-	-	-	-	-	-	-	-	-	-	-	-	-	-	-	-	-
I_{3R}	CY	MT	-	-	-	-	-	-	-	-	-	-	-	-	-	-	-	-	-	-	-	-	-	-	-

WORKING DIAGRAMS

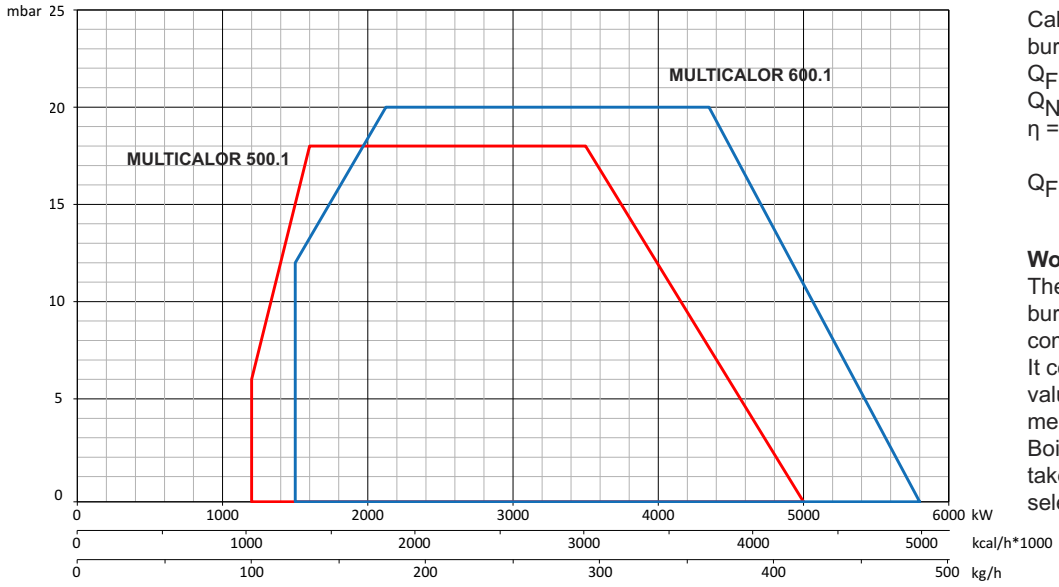

Calculation of burner output
Q_F = Burner output (kW)
Q_N = Rated boiler output(kW)
η = Boiler efficiency (%)

$$Q_F = \frac{Q_N}{\eta} \times 100$$

Working diagrams
The working diagram shows burner output as a function of combustion chamber pressure. It corresponds to the maximum values specified by EN 676 measured at the test fire tube. Boiler efficiency should be taken into consideration when selecting the burner.

TEST BOILER - FLAME DIMENSIONS

FLAME LENGHT GAS BURNERS

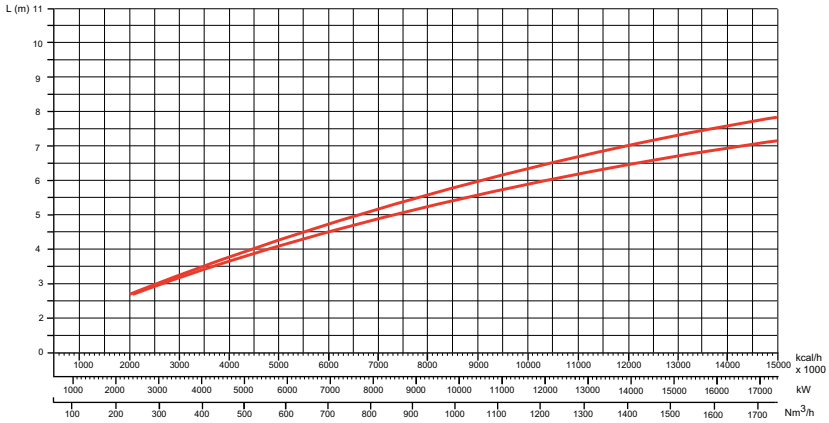

FLAME DIAMETER GAS BURNERS

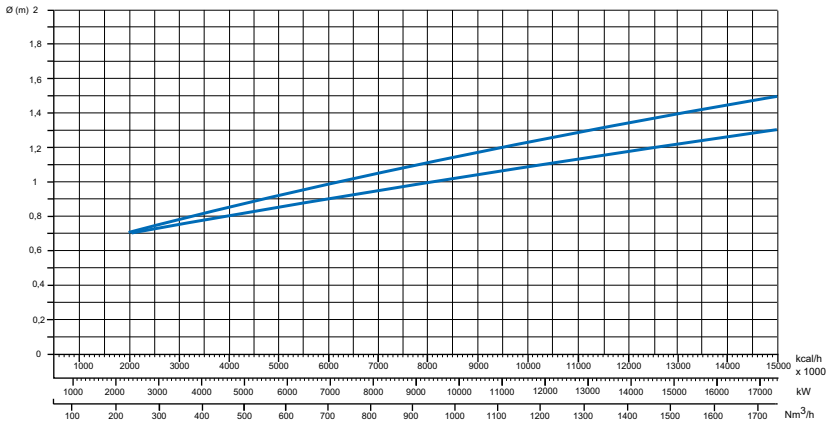

The burner/boiler matching does not pose any problems if the boiler is CE type-approved.
If the burner must be combined with a boiler that has not been CE type-approved and/or its combustion chamber dimensions are clearly smaller than those indicated in diagram, consult the manufacturer.
The firing rates were set in relation to special test boilers, according to EN676 - EN267 regulations.

The sizes are indicative and dipend on the configuration, to the combustion chamber pressure and to the draught. The values have been taken out from tests executed with flame tubes.

The dimensions of the flame are made in test boiler in laboratory without resistence therefore exists max and min lenght that take into account the difference in lenght that comes from the boiler backpressure.

Example:
Burner thermal output = 8000 kW;
L flame (m) = 5 m (medium value)
D flame (m) = 1 m (medium value)

WARNING: Some flame modifications can be done in our FLEXSHOP in the factory in order to shape the flame and adapt it to some special boiler or application.

OVERALL DIMENSIONS

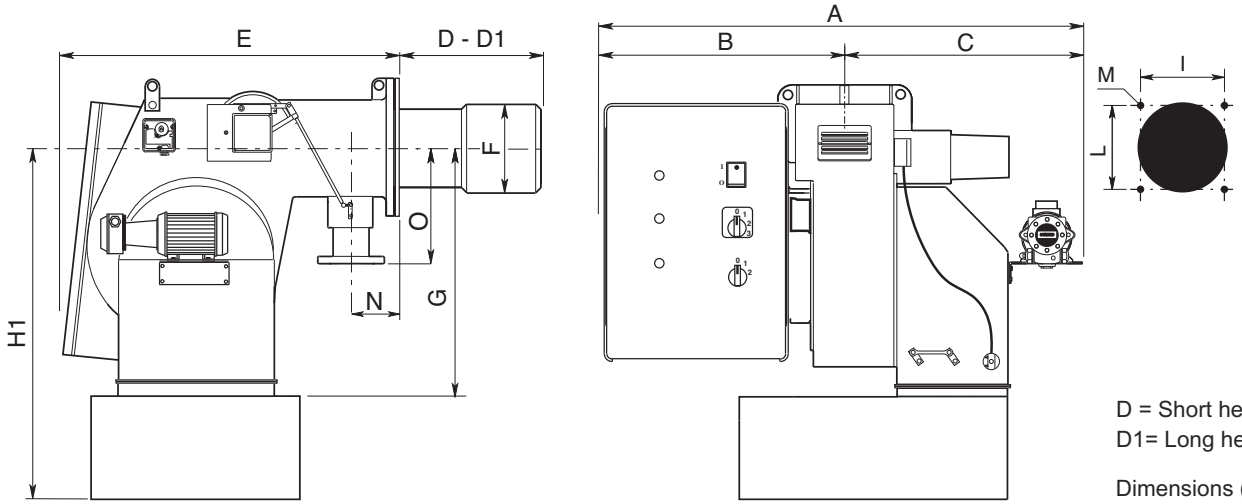

D = Short head
D1= Long head

Dimensions (mm)

Model	A	B	C	D	D1	E	F	G	H1	I	L	M	N	O
MULTICALOR 500.1	1200	590	610	355	555	1000	320	570	965	330	330	M16	195	250
MULTICALOR 500.1S	1200	590	610	-	950	1000	320	570	965	330	330	M16	195	250
MULTICALOR 600.1	1200	590	610	355	555	1000	320	570	965	330	330	M16	195	250

Burner-boiler mounting flange

Fixing hole dimensions are “I” and “L” as per dimension table.
Boiler hole shall be done according to the blast tube dimension “F” plus 15-25 mm in order to be able to extract it during maintenance.

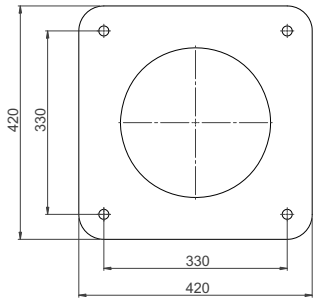

WARNING: Please follow the suggested dimension for the hole on the boiler flange in order to fit the burner. Make sure that between the boiler and the blast tube proper insulation is fitted.

HOW TO INSTALL THE GAS TRAIN INTO THE BURNER AND CALCULATE THE OVERALL DIMENSIONS:

refer to the dimension page and the gas train manual for all detailed information

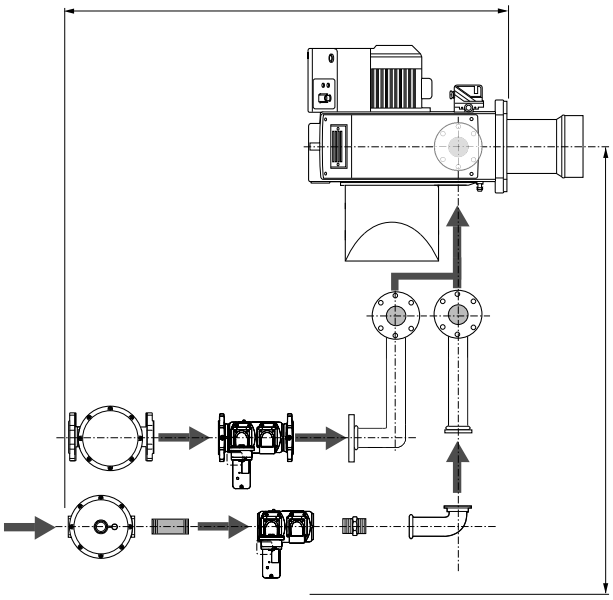

Burner gas flange

Model	ø A1	B1
MULTICALOR 500.1	145	4 x M16
MULTICALOR 600.1	145	4 x M16

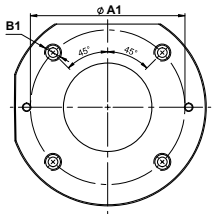

Packaging (only burner)

Model	X	Y	Z	kg
MULTICALOR 500.1	1580	1630	1090	
MULTICALOR 600.1	1580	1630	1090	

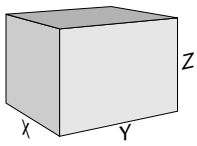

OIL OPERATING MODE - GENERAL SAFETY FUNCTIONS

START-UP MODE

As soon as the furnace system is required to supply heat, the burner control circuit will close and the program flow started. When the program has come to its end, the burner will be turned on.
An automatic test is made for the tightness of the gas valves prior to each burner start. The air damper is in its closed position when the burner is out of operation.
The electric actuator will open the closed air damper to its full-load position so that the burner will ventilate the furnace and the exhaust hoods with the specified air rate.
Shortly after the preventilation process has been started the lack-of-air cut-out must change over to operating position within a certain time, i.e. the minimum air pressure setting must be reached and maintained until the burner is turned off. At the end of the specified pre-ventilation time the air damper will be moved into its partial-load position in a linked control concept with the gas damper. This operation will be followed by the pre-ignition procedure and the oil feed start.
The solenoid valves will open and thus allow the pressurized oil to flow to the nozzle and to the return line.
The oil will be atomized, mixed with the combustion air and ignited.
A safety period is provided to allow the flame to develop a proper and steady pattern.
On the termination of the safety period, a flame signal must have been received by the control box via the flame monitor and remain on until the regular shut-off.
The startup program of the burner has now been completed.

OIL OPERATING MODE

After the flame has developed the load regulator will be enabled which brings the burner into its operating position.
The load regulator will now control the burner automatically between its partial-load and full-load stages.

Depending on the heat demand, the electric actuator of the mechanical compound control system will be fed with the OPEN or CLOSE signal via the regulator and thus increase or decrease the oil and air flow rates.
This compound control system will vary the positions of the oil control valve and air damper and thus regulate the oil flow rate in conjunction with the air flow rate. The burner can either be controlled in two-stage sliding mode or, if a respective controller is provided, in stepless control mode.
The stepless control will allow the burner to be operated at any desired stage between its partial-load and full-load positions. The burner will be turned off from its partial-load position. The air damper will be closed when the burner is out of operation and will thus prevent cold air flowing through the burner chamber, heat exchanger and chimney.
The interior cooling losses will be greatly minimized.

Oil control:

2-stage sliding

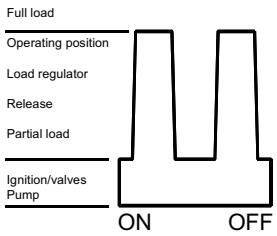

Stepless

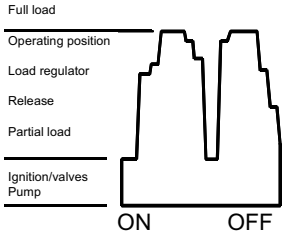

Gas control:

2-stage sliding

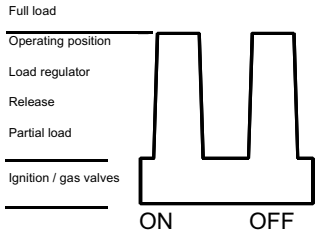

Stepless

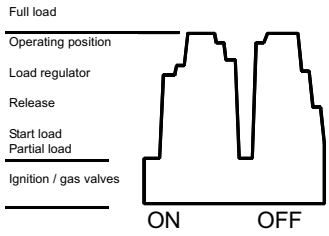

GENERAL SAFETY FUNCTIONS

In case a flame does not develop when starting the burner (fuel release) the burner will shut off at the end of the safety period (safety lock-out).
A safety lock-out will also occur in the case of flame failure during operation, air flow failure during the pre-ventilation phase and pressure failure during the whole period of burner operation.
Any failure of the flame signal at the end of the safety period and a flame signal during the pre-ventilation phase (external light control) will result in a safety lock-out with the control box being locked.

The trouble is indicated by the trouble signal lamp lighting up.
The control box can be unlocked immediately after a safety lock-out by pressing the unlocking key. The program unit will return to its starting position and proceed with the restart of the burner.
A voltage failure will result in a regular shut-off of the burner. Upon voltage recovery there may be an automatic restart unless another interlock is provided, e.g. by the safety system. In any case of trouble the fuel oil supply will be shut off right away. The program unit will stop at the same time causing also the trouble location indicator to stop.
The symbols will indicate the kind of trouble.

GAS OPERATING MODE - GENERAL SAFETY FUNCTIONS

START-UP MODE

As soon as the furnace system is required to supply heat, the burner control circuit will close and the program flow started.
When the program has come to its end, the burner will be turned on.
An automatic test is made for the tightness of the gas valves prior to each burner start.
The air damper is in its closed position when the burner is out of operation.
The electric actuator will open the closed air damper to its full-load position so that the burner will ventilate the furnace and the exhaust hoods with the specified air rate.
Shortly after the preventilation process has been started the lack-of-air cut-out must change over to operating position within a certain time, i.e. the minimum air pressure setting must be reached and maintained until the burner is turned off. At the end of the specified pre-ventilation time the air damper will be moved into its partial-load position in a linked control concept with the gas damper.
The ignition transformer will be started.
At the end of the pre-ignition time the ignition gas solenoid valves will be opened to allow gas to flow into the pilot burner.
The ignition electrodes incorporated in the pilot burner will ignite the ignition gas.
The UV cell gives flame signal to control box so that the safety shut-off valves will be opened.
The gas will be fed to the gas nozzles via the gas damper while combustion air is supplied by the fan.
Gas and air will be intensively mixed in the mixing unit and ignited by the pilot flame with a specified safety period (minimum furnace heat generating rate).
After the safety period has run down the pilot burner will be turned off.

Attention:
If there are shut-off dampers in the flue gas tract they must be completely open. Otherwise there will be a high danger of low-speed detonation or explosion!

GAS OPERATING MODE

After the flame has developed the load regulator will be enabled which brings the burner into its operating position.
The load regulator will now control the burner automatically between its partial-load and full-load stages. Depending on the heat demand, the electric actuator of the compound control system will be fed with the OPEN or CLOSE command via the regulator and thus increase or decrease the gas and air flow rates.
This compound control system will vary the positions of the gas control valve and air damper and thus regulate the gas flow rate in a linked concept with the air flow rate. The burner can either be controlled by a 2-stage sliding or, if a respective controller is provided, a stepless control concept.
The stepless control will allow the burner to be operated at any desired stage between its partial-load and full-load positions.
The burner will always be turned off out of its partial-load position.
The air damper will be closed when the burner is out of operation and will thus prevent cold air flowing through the burner chamber, heat exchanger and chimney.
The interior cooling losses will thus be greatly minimized.

Scheme of functioning

LEGEND
107: pilot gas filter/governor
141: ball valve
142: filter
143: antivibration coupling
150: butterfly valve
151: gas train Siemens VGD
155: pilot gas train
176: oil pump
178: solenoid valve
184: output control valve
311: return oil pressure switch
313: min gas pressure switch
CV: check valve
RL: return line
VL: suction line
VLO: working oil valve

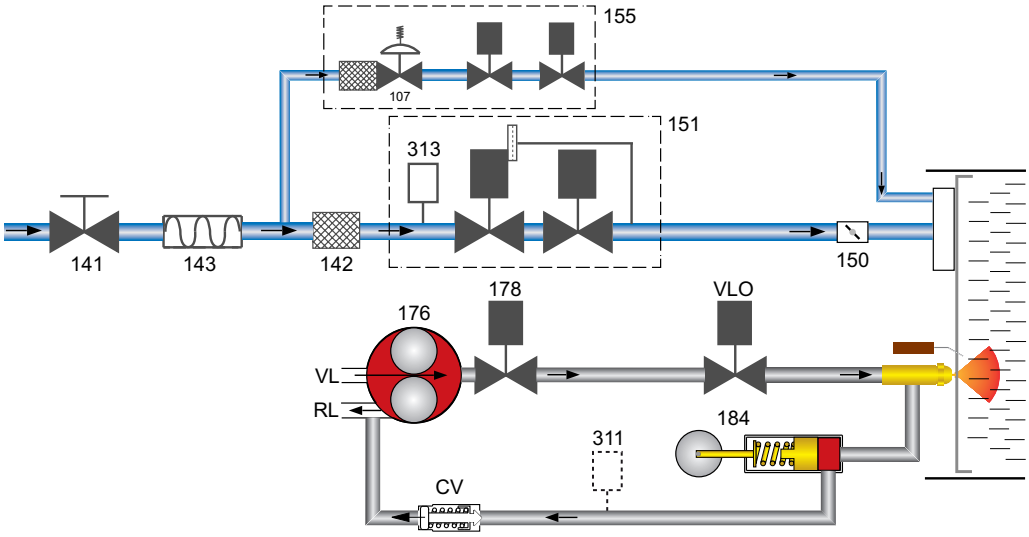

INSTALLATION

Fitting the burner to the boiler

WARNING: handling and moving operations must be carried out by specialised personnel.
Use the eyebolts to lift the burner in order that it will not overturn and fall down.

To perform the installation of the burner into the boiler drill the boiler plate according to the dimension given on this manual and place the burner towards it by lifting and moving the burner by means of eyebolts.

Place the gasket on the burner flange and install the burner into the boiler by fixing nuts into the bolts.
The space between the blast tube and the boiler lining must be sealed with appropriate insulating material.

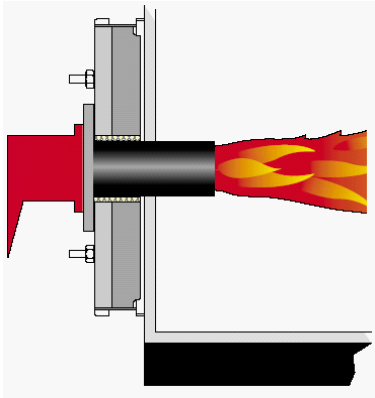

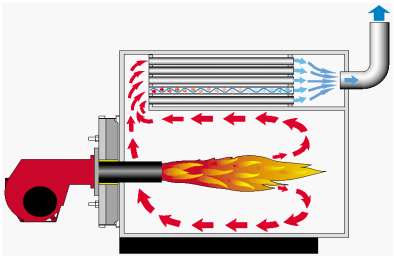

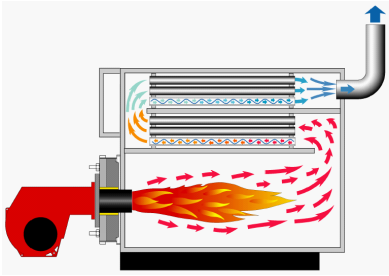

Burner blast tube insertion depth and brickwork
Unless otherwise specified by the boiler manufacturer, heat generators without a cooled front wall require brickwork or insulation 5 as shown in the illustration. The brickwork must not protrude beyond the leading edge of the blast tube, and should have a minimum conical angle of 60°. Gap 6 must be filled with an elastic, non-combustible insulation material. For boilers with reverse firing, the minimum burner tube insertion depth A as specified in the boiler manufacturer's instructions must be observed.

On boilers the blast tube insertion depth should be observed as per the boiler manufacturer's instructions.
Reverse flame boiler :
A = 50-100 mm.
Three pass boilers :
A1 = 50-100 mm.

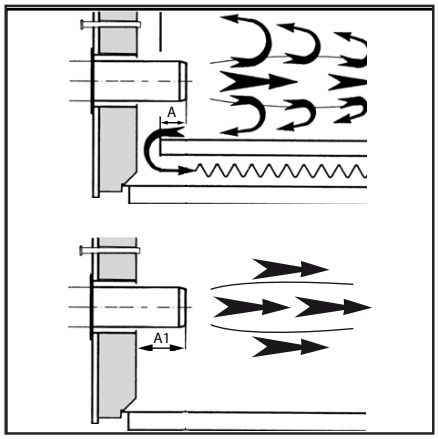

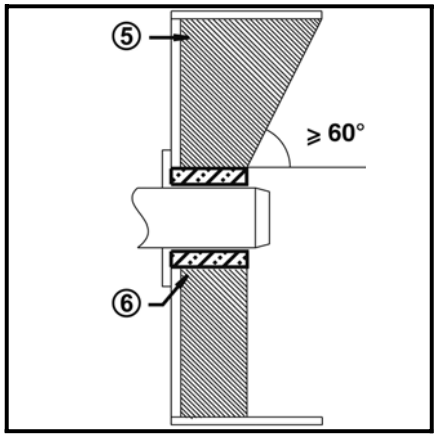

Exhaust system
To avoid unfavourable noise emissions, right-angled connectors should not be used on the flue gas side of the boiler.

BURNER LINING
Check before burner installation:
1. Depending on the type of boiler (reverse flame or three pass) check the burner blast tube installation depth according to the data specified by the boiler manufacturer or consult the burner producer.

2. From the factory the nozzle for progressive version must be specified from the customer according to boiler output and combustion chamber geometry, otherwise we will select the nozzle for the 80% capacity of the burner.

3. Check the ignition electrodes and the nozzle on the burner head as per factory setting (see figures).
The setting of the mixing and ignition unit according to the boiler output will be performed during commissioning procedure.

4. Check that the head is preset at 50%.

Position of the electrodes - nozzle installation

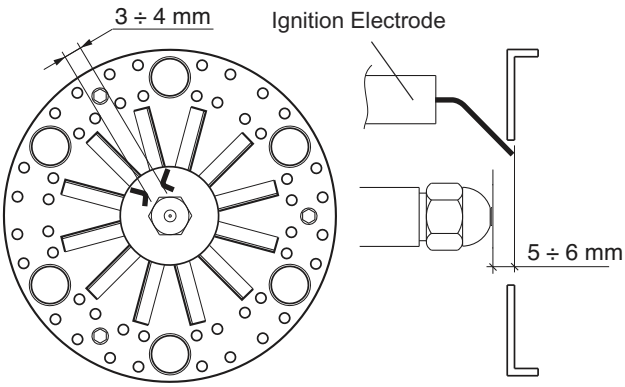

INSTALLATION

Oil connection

WARNING: make sure that the feeding line is properly dimensioned and is in compliance with the local safety rules and code of practise in the country of installation

HYDRAULIC CIRCUIT LIGHT OIL FEEDING

176: oil pump
178: solenoid valve
184: output control valve
311: return oil pressure switch
CV: check valve
RL: return line
VL: suction line
VLO: working oil valve

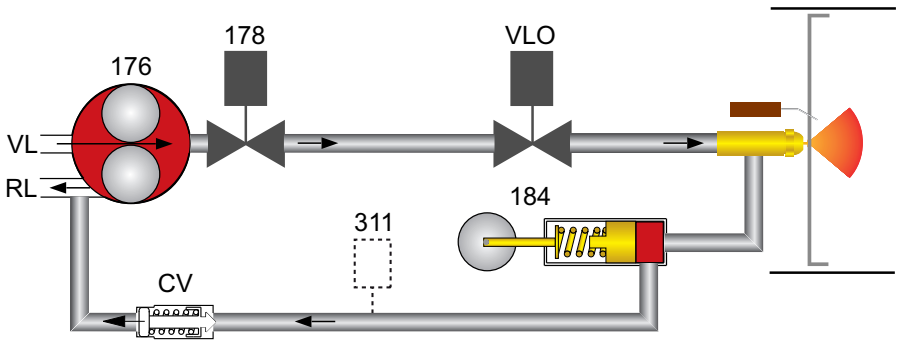

OIL PRESSURE CONTROL (FEED)
The feed pressure is controlled by means of the pressure regulator installed in the pump and should be set at 25. The pressure regulator is operated by turning its screw. Make sure to fill the pump with oil prior to taking into operation.

PUMP BLEEDING
Open the feed and return stop valves and ensure the ring line (if any) is in operation. Reduce the oil pressure at the pressure regulating valve. Turn on the pump by pressing the contactor.
Check the pump for proper direction of rotation. Check for proper oil delivery and absence of leaks in the hydraulic oil system. For bleeding the pump open the pressure gauge connection, for example. When taking the burner into operation pro ceed by gradually increasing the pressure to operating level (25 bar).

CHECKING THE PRESSURE (OIL SUCTION PRESSURE)
The maximum permissible vacuum is 0,4 bar. At higher vacuum levels the fuel oil will tend to separate air from oil which may lead to operating trouble. In the ring line mode of operation the recommended oil pressure is 2 bar.

OIL CONNECTION
Hoses are used for connection to the oil lines and stop valves. The hoses must be installed according to the applicable standards (relieved of tensile load, free of distortion) to avoid kinking and exclude the danger of breakage. Take care when mounting the oil lines to bring their ends as close to the burners as possible and to arrange them in a way that the boiler door and the burner can be swing out without any obstruction.
Refer to the technical documentation for the line dimensions for the feed and return lines from the stop valves to the tank.

OIL FILTER
A filter must be installed upstream of the pump to protect the oil pressure pump and the hydraulic system.

INSTALLATION OPTIONS
• Two-line installation (separate feed and return lines without delivery pump).
• Ring line system (with delivery pump and gas-air separator).

LEGEND
1. Inlet
2. Return
3. Bleed and pressure gauge port
4. Vacuum gauge port
5. Pressure adjustment
6. Nozzle outlet
7. Heater
8. Hose
9. Oil filter
10. Oil ball valve

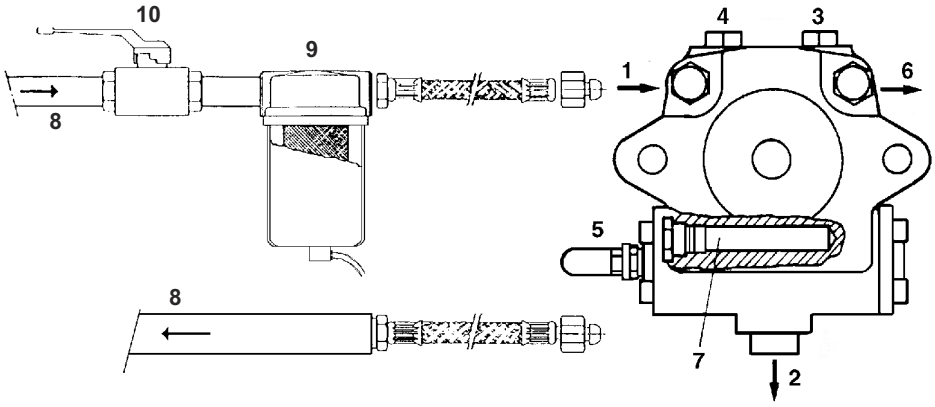

WARNING: Check that the pump rotation is correct and before start up it has been pre-filled

INSTALLATION

Feeding and suction line for light oil

SUCTION LINE LENGTHS FOR PIPE SYSTEMS

• Two-pipe siphon feed system

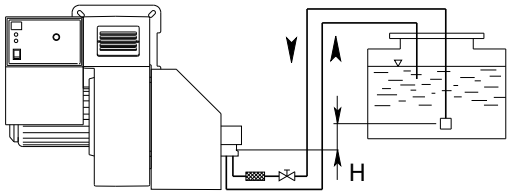

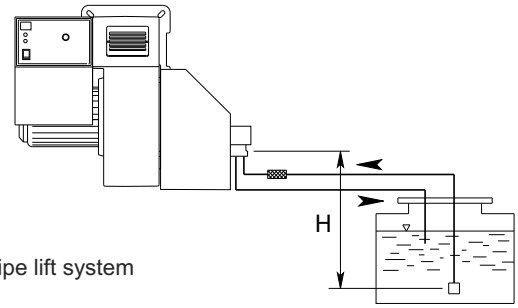

• Two-pipe lift system

The burner is equipped with a self-priming pump which is capable of feeding itself within the limits listed in the table at the side.

H (m)	PIPE LENGTH (m) TA4	
	ø 20 mm	ø 30 mm
3	65	150
2,5	60	150
2	55	150
1,5	50	150
1	45	150
0,5	40	150
0	35	150
-0,5	28	150
-1	22	150
-1,5	12	150
-2	7	150
-2,5	--	150
-3	--	123
-3,5	--	78
-4	--	38

WARNING: To calculate the length of the pipework all the straight parts, curves, up and down pipes must be taken into consideration.
The static suction height is the distance between the standing valve and the axis of the burner pump.
Negative pressure must not exceed 0,45 bar; if negative pressure is greater pump operation may become faulty, leading to an increase in mechanical noise and perhaps even breakage.
All oil ring installations must comply with the local safety rules existing in the country of installation

The pumps that are used can be installed both into single-pipe and double-pipe systems:
Single-pipe system: a single pipe drives the oil from the tank to the pump's inlet that deliver the pressurized oil to the nozzle and part of the oil not used goes back to the pump. With this single pipe the by-pass plug must be removed and the return port must be sealed with steel plug and washer.
Double-pipe system: this is the default solution from the factory.
The return pipe send the excess oil from the pump to the tank. Depending on the type of pump used to change from a 1-pipe system to a 2-pipe-system, insert the by-pass plug (as for ccw-rotation referring to the pump shaft).

Note for commissioning: during commissioning, the filter, pipelines and pumps must be pre-filled with fuel oil and vented.
The direction of rotation of the motor should be checked. When commissioning it must be ensured that pump never run dry.

NOZZLE SELECTION

Please refer to diagram to select Ecoflam recommended nozzle for the output that is required given the output necessary in the installation.
Regular maintenance is highly recommended.
Nozzle has to be cleaned in petrol or paraffin and if filter or other parts are defective or
damaged the nozzle must be replaced.

NOZZLE CHART IS AVAILABLE ON APPENDIX PAGE

SUNTEC TA

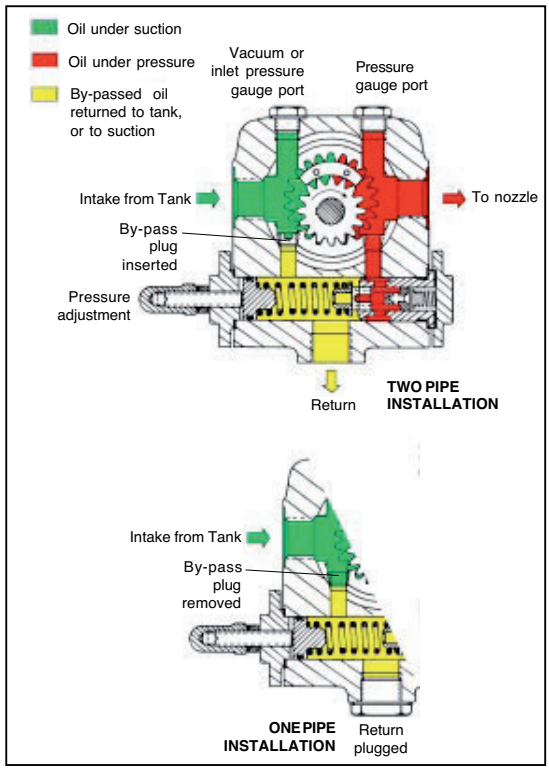

INSTALLATION

Gas line

CONNECTION DIAGRAM FOR BURNERS WITH SEPARATE PILOT (GAS TRAIN SIEMENS VGD...)

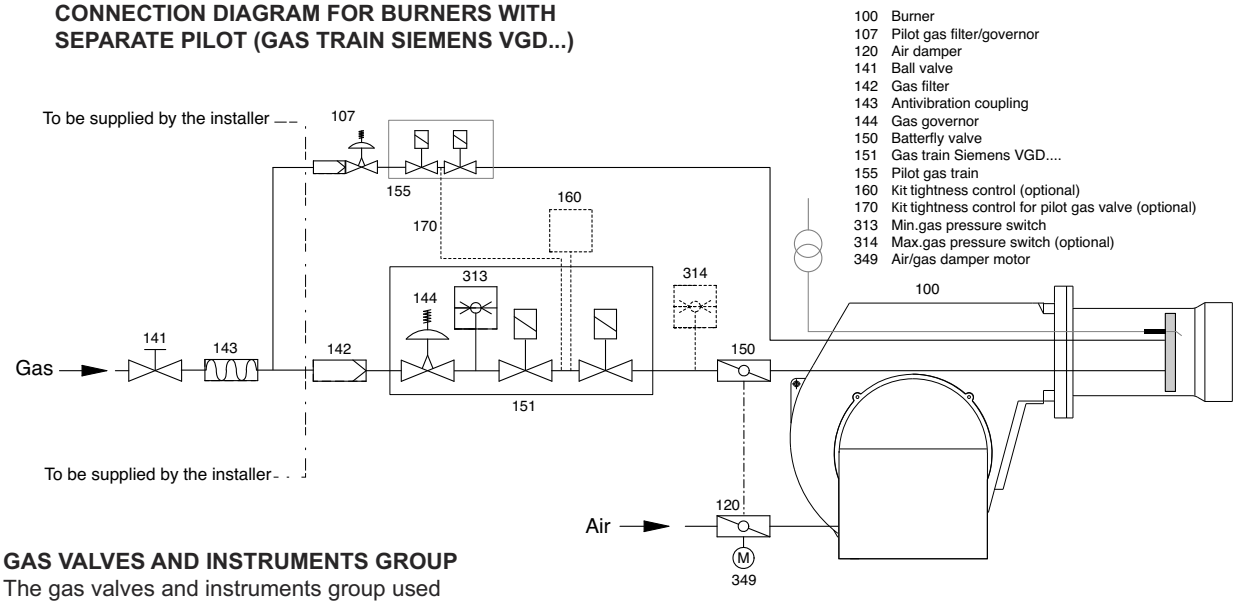

100 Burner
107 Pilot gas filter/governor
120 Air damper
141 Ball valve
142 Gas filter
143 Antivibration coupling
144 Gas governor
150 Batterfly valve
151 Gas train Siemens VGD....
155 Pilot gas train
160 Kit tightness control (optional)
170 Kit tightness control for pilot gas valve (optional)
313 Min.gas pressure switch
314 Max.gas pressure switch (optional)
349 Air/gas damper motor

GAS VALVES AND INSTRUMENTS GROUP
The gas valves and instruments group used with the furnace will be selected according to the specific requirements to be met by a burner system.
The following factors must be taken into account:
• burner output
• furnace back pressure
• gas pressure loss of the burner head
• gas pressure losses of the gas valves and instruments group

NOTE: Only gas trains assembled by the burner manufacturer and approved in accordance with the burner test specifications.
EN676 compulsory kit and accessories in order to comply to the safety regulations.
Additional accessories and kits shall be installed by the installer in accordance to the local safety regulations and codes of practise.

GAS CONNECTION PRESSURE
A minimum connection pressure must be available upstream of the burner gas valve to ensure the proper functioning of the burner.
WARNING: *the total gas pressure loss must always be smaller than the available gas flow pressure.*
For the installation of the valves and instruments group take care to observe the mounting instructions supplied by their manufacturers (these are packed with the equipment).
The gas line installed to the burner must be dimensioned in accordance with the throughput rate and the available pressure.
For selecting the nominal bore “DN” of the gas valves and instruments group care should be taken to observe the flue resistance of the boiler and the gas pressure loss of the burner and valves and instruments group.

GAS VALVES AND INSTRUMENTS GROUP
The gas valves and instruments group can be connected directly to the gas feed line.
Take care to observe the correct order of installation and direction of flow (arrow on housing).
Check the valves and instruments and connection pieces for absence of dirt particles and foreign matter before installation and initial operation. To provide effective conditions for start-up make sure the distance between the burner and the gas stop valve is as short as possible.

LEAK TEST
The gas line upstream of the burner gas valves and instruments group must be installed in accordance with the applicable regulations, checked for absence of leaks, vented and certified accordingly by the gas installation company. The screwed unions and flanged joints must be checked for proper tightness (by making a pressure test). The leak test must be made under pressure using approved foaming agents which do not cause corrosion. For steam boiler furnaces the result of the leak test must be duly certified.

VENTING
Prior to taking the burner into operation or after any repair work make sure to vent the complete gas feed line and the gas valves and instruments group into the open atmosphere (e.g. by means of a hose) taking care to avoid any hazards.
In no case should the gas line be vented into the heating or furnace chambers.
Make use of a test burner to check the gas-carrying spaces are free from an inflammable gas mixture.

SUPPORT
The valves and instruments group must be supported with a telescopic jacking member or similar during and after installation (e.g. on filter and valve).

JOINT
It is recommended to provide an easy to disconnect joint (with planar sealing faces) to facilitate repair work on the boiler (furnace) and allow the boiler door to be swivelled out if required.

INSTALLATION

Pilot gas train, kit and accessories connection - head loss diagram

PILOT GAS TRAIN CONNECTION
The pilot gas train is already installed to the burner and shall be connected to the main gas supply line preferebly with flexible pipe.
The pilot gas train is composed of n° 2 safety valves and n°1 gas governor and filter. Max inlet pressure 1 bar.
WARNING: Pilot gas train must be connected according to the drawing of the gas line.

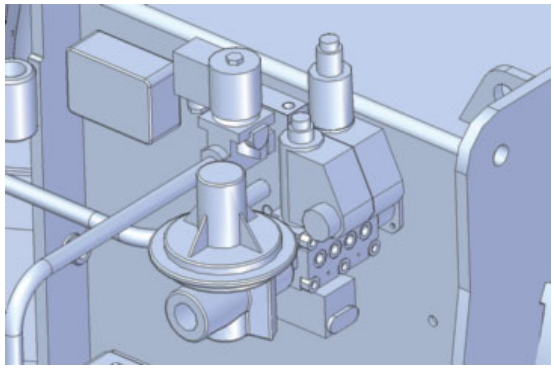

GAS VALVES ADJUSTMENT
Note : the pilot valves are pre-adjusted in the factory. To increase or reduce the gas flow act on the gas governor.

GAS GOVERNOR ADJUSTMENT
The gas governor, with built-in filter, must be installed so as to stabilise the outlet gas pressure and to avoid that eventual impurities reach the gas valve. To increase gas pressure, remove the cover of governor and turn screw C. Unscrew screw C to reduce pressure, then fit the cover.
Note: the inlet gas pressure must not be higher than the specified max. gas pressure.

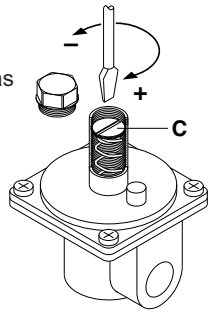

KITTC- Tightness control
Tightness control is provided as a kit and shall be assembled into the main gas train according to the instructions of the gas train separate manual.

KITPRES... Maximum pressure switch assembly
Maximum pressure switch is provided as a kit and shall be assembled into the main gas train according to the instructions of the gas train separate manual.

KITMD-RWF50 PID regulator
All progressive burner can be turned modulationg with the installation of the PID that regulates the output combined with a probe.

Tightness control	Modulation Kit	Max Pressure switch
KITTC- Model	KITMD-RWF50	KITPRES50
Compulsory > 1200 kW	Probe-...	KITPRES150
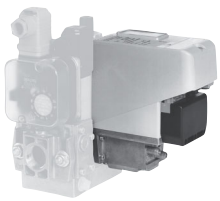		

GAS PRESSURE LOSS DIAGRAM:
combustion head - platform 380

The diagram provides combustion head pressure loss. To have pressure loss combined with the different type of gas train you must refer to the pressure loss diagrams.

WARNING:
Note that the head loss diagram is only indicative and does vary depending on the setting of the head.

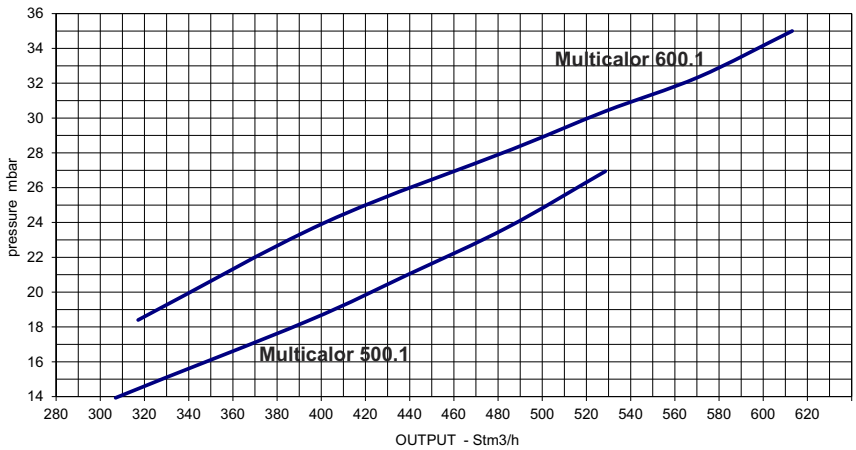

INSTALLATION

Gas pressure loss diagrams

! PRESSURE DROP includes: “COMBUSTION HEAD + GAS TRAIN + GAS GOVERNOR & FILTER” as per EN676 Standard.
Back pressure of boiler (or other applications) must be added/included in order to have the total min pressure drop.

Burner	Gas train	Advisable gas governor & filter	Spring color	Inlet gas pressure MIN [mbar]	Inlet gas pressure MAX [mbar]	Diagram
BLU 5000.1 PR MULTICALOR 500.1 MULTIFLAM 500.1	VGD 40.125	no	yellow	33	500	3C
		FILTER DN 125		35	500	
	VGD 40.100	no	yellow	40	500	
		FILTER DN 100		45	500	
	VGD 40.080	no	yellow	60	500	
		FILTER DN 80		75	500	
	VGD 40.065	no	yellow	110	500	
		FILTER DN 65		140	500	
	VGD 20.503	no	yellow	210	500	
		FILTER 2"		250	500	

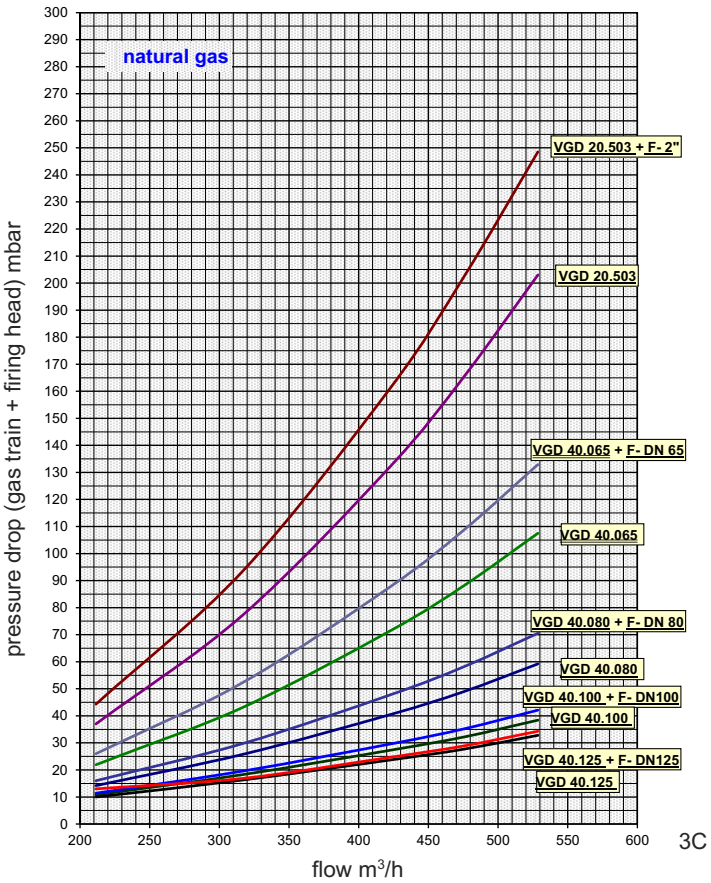

LEGEND
Pf: Back pressure of furnace
Pb: Pressure of burner (combustion head + complete gas train)
Pin: Minimum inlet pressure

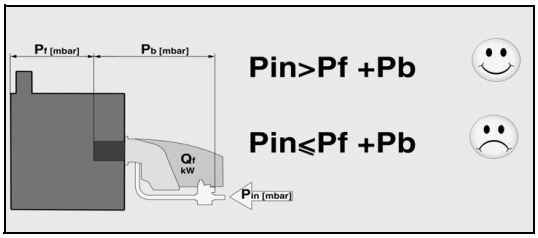

INSTALLATION

Gas pressure loss diagrams

! PRESSURE DROP includes: “COMBUSTION HEAD + GAS TRAIN + GAS GOVERNOR & FILTER” as per EN676 Standard.
Back pressure of boiler (or other applications) must be added/included in order to have the total min pressure drop.

Burner	Gas train	Advisable gas governor & filter	Spring color	Inlet gas pressure MIN [mbar]	Inlet gas pressure MAX [mbar]	Diagram
BLU 6000.1 PR MULTICALOR 600.1 MULTIFLAM 600.1	VGD 40.125	no	yellow	45	500	4C
		FILTER DN 125		50	500	
	VGD 40.100	no	yellow	55	500	
		FILTER DN 100		60	500	
	VGD 40.080	no	yellow	80	500	
		FILTER DN 80		100	500	
	VGD 40.065	no	yellow	150	500	
		FILTER DN 65		180	500	
	VGD 20.503	no	yellow	275	500	
		FILTER 2"		340	500	

1C.2

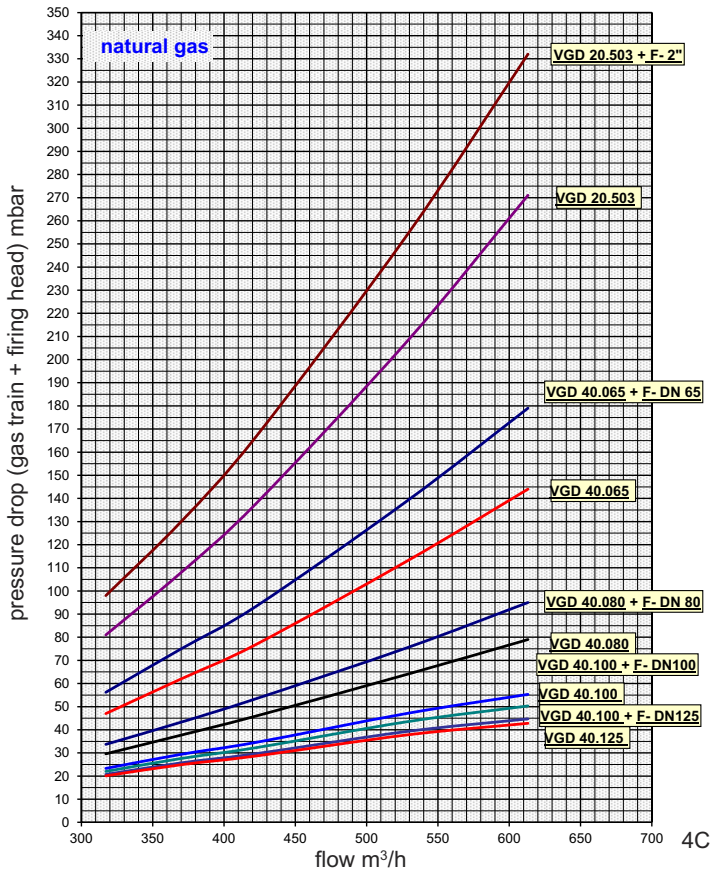

4C

LEGEND
Pf: Back pressure of furnace
Pb: Pressure of burner (combustion head + complete gas train)
Pin: Minimum inlet pressure

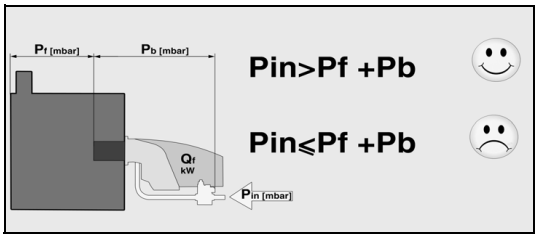

INSTALLATION

Electrical connections

WARNING: Electrical wiring must be carried out with electrical supply disconnected and with burner switch in position OFF.
Electrical supply must correspond to the one shown on the burner label.

APPLICABLE STANDARD
The electrical connection work comprising all the installation materials, terminals and earth connections must be carried out in accordance with the applicable regulations. For the electrical installation of the burner care must be taken to observe the circuit diagram made out for the furnace system.
The electrical connection of the burner and gas valves and instruments shall be entrusted to authorized specialists only.

NOTE: For the installation of the connection cables care must be taken to provide cable loops of sufficient length to allow for the swing-out of the boiler door and burner.
Make sure after the completion of the electrical connection work to check the wiring of the electrical system of the burner. This should include a check of the direction of rotation of the burner motor (fan).

GENERAL WARNINGS:
All applicable electrical safety regulations must be followed. Failure to correctly dimension the suitable input power and earth the equipment may cause damages to person and compromise the correct function of the burner therefore the electrical system shall be checked by qualifed personnel.
The manufacturer declines all responsibility for modifcations or connections different from those shown in the electrical scheme.
Adapters, multiple plugs and extension cables may not be used for the equipment's power supply.
An omnipolar switch in accordance with current safety regulations is required for the mains supply connection.

ELECTRICAL CONNECTION
1) of the burner
- Built-in electrical cabinet
Use cable gland in order to secure the required level of protection. All the links, power and control, are connected to the terminal block of the cabinet. Provide cables in sufficient length to secure the rotation of the burner body according to the assembly.
Check and adjust the size of the contactors and thermal relays and the wires section according to the motor and supply voltage specs.

ATTENTION: Wiring is not supplied.

2) of the gas train
- Connect the plugs pending to the valve: either on the cabinet,
or on the coupling case on the body of the burner.

3) of the fuel oil motor-pump unit
- Connect the power circuit of the motor (hanging wires) to the plugs on the fuel oil valves.
- Check the rotary direction.

The burners are produced with connections suitable for power supply 400 V three-phase.
The burners with electric motors of an output lower or equal to 3 kW can be adapted to 220-230 V (please follow the instructions on the backside); motors with higher output can only work 380-400 V three-phase.
In case of request of burners different from the above mentioned standard, it is recommended to make specific mention in the order.

Instructions: how to adapt electric motors of an output lower or equal to 3 kW to 220-230 V power supply
It is possible to change the voltage of the burner by operating as follows:
1. change the connection inside the electric box of the motor, from star to delta (see picture 1);
2. change the setting of the thermal relay, referring to the absorption values indicated in the motor nameplate. If necessary, replace the thermal relay with another one of suitable scale.
This operation is not possible on motors above 3 kW.
For more information, please contact the Ecoflam staff.

PROBES CONNECTION

ACTIVE PROBE CONNECTION
(FOR MODULATING VERSION)

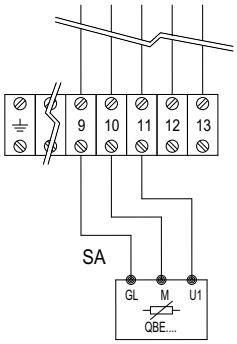

PASSIVE PROBE CONNECTION
(FOR MODULATING VERSION)

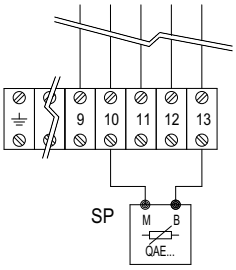

fig.1

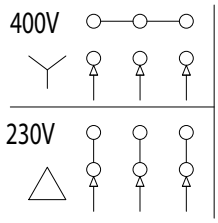

LEGEND
HLB: lock-out lamp
STAB: two stages thermostat
HLF: burner on flame lamp
STC: boiler thermostat
STS: safety thermostat
SA: active probe
SP: passive probe

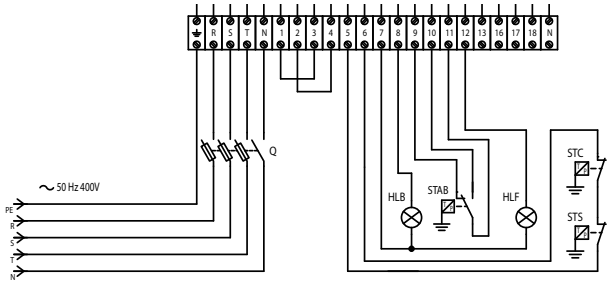

START-UP: CHECKING PROCEDURE

CHECKS BEFORE COMMISSIONING:
• That the burner is assembled in accordance with the instructions given here.
• Setting the combustion components.
• All electrical connections must be correct.
• Check the burner motor for correct direction of rotation.
• The heat generator must be ready for operation, and the operating regulations for the heat generator must be observed.
• The heat generator and heating system must be filled with water and the circulating pumps must be in operation.
• The temperature regulator, pressure regulator, low water detectors and any other safety or limiting devices that might be fitted must be connected and operational.
• The exhaust gas duct must be unobstructed and the secondary air system, if available, must be operational.
• An adequate supply of fresh air must be guaranteed.
• Make a test of the all gas-carrying elements for absence of leaks.
• Check tank, lines and oil pump are filled with oil and correct oil nozzle is fitted.
• With burner in starting position check that air damper is in “CLOSED” position.
• Check that control box is unlocked and in its original position.
• A standard-compliant measuring point must be available, the exhaust gas duct up to the measuring point must be free of leaks to prevent anomalies in the measurement results.

OIL START-UP
Open all shut-off valves of oil supply system.
• Set fuel selector switch to its “Oil” position.
• Fill pump with oil.
• Mount pressure gauge in the feed line and return line.
• Mount the pressure gauge for checking the pump suction pressure.
• Make sure that the nozzle is size and mounted correctly.
Bleeding of oil system
Shortly start the burner and check for proper direction of rotation. Bleed the oil line and oil pump.

CAUTION: The hydraulic system has been filled with oil by the manufacturer.
This may cause ignition trouble when initially operating the system.
When starting the burner take care to increase the oil pressure slowly to the operating level.

GAS START-UP
NOTE: Adjust the gas unit according to the fuel oil unit. Set the fuel selector switch to its “Gas” position.
• Connect the measuring instruments for the gas head pressure on the test connection downstream of the gas damper and the air pressure on the burner test connection.
• Open the gas shut-off valve before the gas-armatures and test the gas pressure on the pressure gauge
• Set the “Manual-Automatic” selector switch to “Manual”.

If the gas valves are tested for absence of leaks, this should be continued until a positive result is obtained. If a valve is found to leak, the program will not step forward to the control box.
The burner will start according to the program flow of the control box.

Prior to the initial fuel feed start make a functional test of the burner program flow:

Oil system:
• Open all shut-off valves of the oil supply system.
• The oil solenoid valve in the feed line disconnect on the terminal strip (see Circuit Diagram).
• Start burner and check program flow for correct start-up sequence:
1. Fan starts.
2. Pre-ventilating damper.
3. Air pressure check.
4. Partial-load air damper.
5. Ignition.
6. Valves open (disconnected valve remains closed).
7. Shut-off upon trouble after expiry of safety period (see control box).
• Reconnect the valve.
• Unlock the control box.

Gas system:
• Shortly open the gas shut-off valve before the gas train until pressure is available and close again.
• Start burner and check program flow for correct start-up sequence:
1. Fan.
2. Pre-ventilation damper.
3. Check air pressure.
4. Partial-load damper.
5. Ignition.
6. Valves open.
7. Shut-off upon trouble after expiry of safety period (see control box) or shut-off because of gas supply failure.
7. The burner will either stop as the gas valves open (due to gas pressure decrease) or lock out at the end of the safety time.
• Unlock the control box.

Recording commissioning data

Test			n°1	n°2	n°3	n°4
Date						
Model						
Type gas						
Type oil						
Gas calorific value						
Oil calorific value						
Gas inlet pressure		mbar				
Adjustment gas pressure						
Volumetric gas flow rate		Nm^3/h				
Burner output	min	kW				
Burner output	max	kW				
Flue gas temperature		C°				
Air temperature		C°				
CO_2		%				
CO		ppm				
NOx		ppm				
Performance		%				
Corrective action						
Operator name						
Company						

EXHAUST GAS TEST

To ensure an economically efficient and trouble-free operation of the system it will be necessary to adjust the burner specifically in accordance with the furnace system. This is achieved by means of a fuel-combustion air compound control unit which adjusts the burner to ensure a proper combustion. Exhaust gas tests are required for this purpose.
The percentage CO2 and O2 and the exhaust gas temperature will have to be measured to determine the efficiency and combustion quality.
Prior to any measurement make sure to check the boiler and exhaust gas system for absence of leaks.

Secondary air will falsify the measured results
Check that the exhaust gases have a residual oxygen (O2) content as low as possible and a carbon dioxide (CO2) content as high as possible.
The carbon monoxide content of the exhaust gases must be below the currently applicable specifications in all load stages.
In the fuel oil combustion mode the permissible soot number in the exhaust gas is not allowed to be exceeded

DETERMINING THE VOLUMETRIC GAS FLOW RATE
The thermal furnace output of a boiler (QF) is the amount of heat supplied with the gas in a unit of time.
When taking the burner into operation the volumetric fuel flow rate should be selected according to the nominal thermal capacity of the boiler.

Example:

Nom. thermal output	Q_N	1000 kW
Boiler efficiency	n_K	0,88
Calorific value of gas	H_u	9,1 kWh/m³
Gas pressure	p_U	100 mbar
Barometer reading	p_{amb}	980 mbar
Gas temperature relative	t_{gas}	15°C
Gas temperature absolute	T	(t_{gas}+273)
Standard atmosferic pressure	p_n	1013 mbar

$$Q_F = \frac{Q_N}{n_K} = \frac{1000}{0,88} = 1136 \text{ kW}$$

Volumetric gas flow rate at STP:

$$v_{Bn} = \frac{Q_N}{H_u * n_K} = \frac{1000}{9,1*0,88} = 125 \text{ m}^3/\text{h}$$

Volumetric gas flow rate in operating condition:

$$v_{BB} = v_{Bn} \frac{T}{273} = \frac{p_n}{p_{amb} + p_u} =$$

$$= 125 \frac{273+15}{273} \frac{1013,25}{980+100} = 123,9 \text{ m}^3/\text{h}$$

Recommended combustion parameters

Fuel	Recommended (%) CO_2	Recommended (%) O_2
Natural gas	10 ÷ 9	3,1 ÷ 4,8
Light oil	13 ÷ 11,5	3,3 ÷ 5,3
Heavy oil	12,5 ÷ 11	4,2 ÷ 6,2

WARNING: if the installation is above sea level the output of the burner vary base on the diagram.
The regulation of the burner in this case shall take into account the reduced power of the burner due to the missing air.

Ratio between O_2- and CO_2-
for natural gas H (CO_2max = 11,7%)

Ratio between O_2- and CO_2-
for light oil EL (CO_2max = 15,40%)

Ratio between O_2- and CO_2-
for heavy oil S (CO_2max = 15,60%)

$$O_2 = 21 \frac{CO_2\text{max} - CO_2\text{gem}}{CO_2\text{max}} = \%$$

CO_2 gem = % CO_2 measured on dry flue gases

Mean air pressure vs. altitude above sea-level

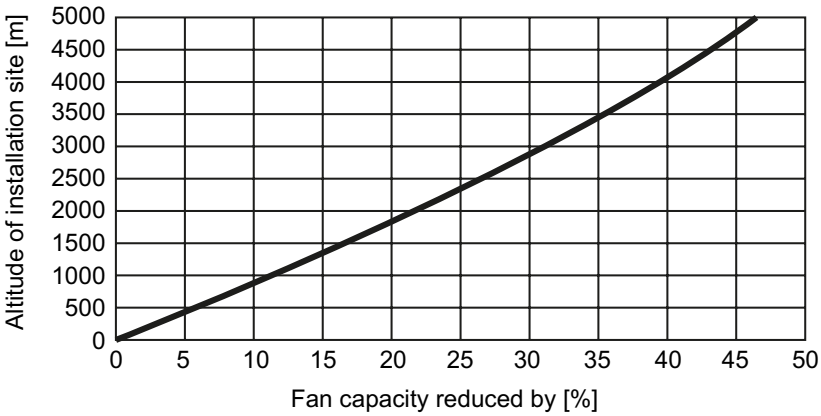

START-UP OIL SIDE

Fuel selection - Start-up

Select the oil operation in order to proceed with start up on the oil side. On the selector put the operation on minimum capacity.

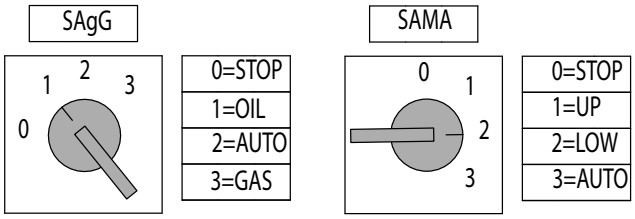

0 : operating elements locked in an intermediate position.
1 : operation on maximum capacity
2 : operation on minimum capacity
3 : automatic operation

! **KMP - KMV contactor:** check the oil pump motor and air fan motor rotation and keep KMP pressed till the oil circuit is loaded.
If the rotation if not correct invert the two phases on the power supply.

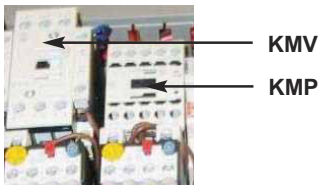

START UP THE BURNER
The control box starts the pre-purge cycle, the fan motor and the oil motor and opens the air flaps in full open positon.
At the end of pre-purging, the control box drives the servomotor into the igniton positon and starts the igniton transformer.
After a few seconds the control box opens the oil valve and starts the flame. After the flame stabilisaton the control box drives the servomotor in the low flame.
In case of faulty igniton, the control box switches the burner into safety condition, in such a case you must rearm the burner.
Gradually go step by step using the selector on positon 0 to stop the flame, from the low flame to the high flame in order to have a stable flame. For each position from 0 to 90° do oil setting adjusting oil return pressure as described in the next pages. When the servomotor arrives at 90° you have completed first tuning of air and oil flow according to the boiler capacity required. Check the combustion values and adjust the oil pressure.

Adjusting the maximum air flow rate

In order to adjust the maximum air flow rate see figure with selector in maximum operation. Loosen the nut holding the air damper transmission rod and correct air flow till you reach the combustion values suggested by reading the value on the combustion analyser. If you do not reach acceptable air flow rate you shall adjust the firing head. Move the head forward to increase air flow backwards to reduce.

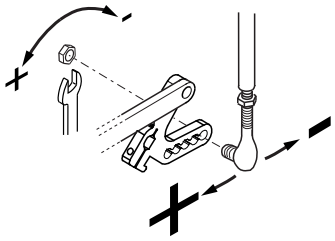

Firing head setting

The firing head is pre-adjusted at the 50% from the factory. The setting fully open enables to reach the full power of the burner and full close to reach the minimum power of the burner.
The optimal position depends on the output that we need to reach but the default setting shall be modified only when you are not able to reach the suggested combustion value by adjusting the air flow in the maximum flame.

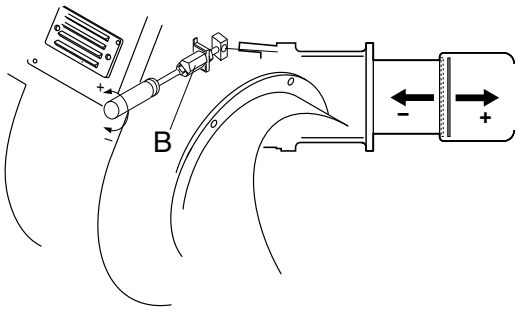

START-UP OIL SIDE

Adjusting the maximum oil flow rate

Put the selector on the maximum operation. Adjust the oil pressure reading the value on the return manometer / pressure gauge according to the nozzle tables provided in the appendix.

NOTE: the pump pressure is set from the factory at the pressure required nozzle pressure required as per table of nozzle selection in appendix. If the output required is different from the one set from the factory the pressure can be adjusted according to the instruction below.

Servomotor SQM50 - Air damper motor pre-setting

The cams of the servomotor are set from the factory in order to start the burner and reach the maximum output.
The following setting are the standard one:
I. High flame position 90° (maximum value 70°).
II. Air flap position in standby 0° (minimum value 0°).
III. Ignition position gas 15°.
IV. Ignition position oil 15°.
V. Low flame position gas 25° (can be modified depending on the minimum output of the boiler).
VI. Low flame position oil 25° (can be modified depending on the minimum output of the boiler).
VII. To VIII not used

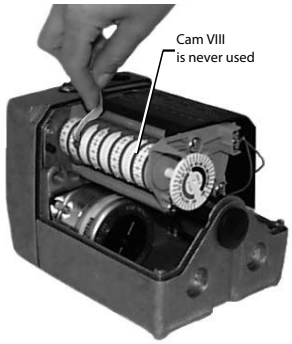

Adjusting the pump pressure

1 - INLET
2 - RETURN
3 - BLEED AND PRESSURE GAUGE PORT
4 - VACUUM GAUGE PORT
5 - PRESSURE ADJUSTMENT
6 - TO NOZZLE

SUNTEC TA....

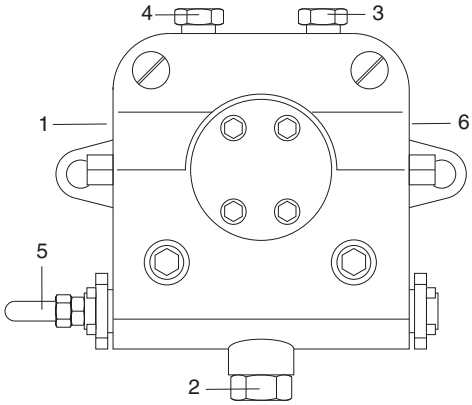

The pump pressure is set at a value of 22-25 bar during the testing of burners.
Before starting the burner, bleed the air in the pump through the gauge port.
Fill the piping with light oil to facilitate the pump priming. Start the burner and check the pump feeding pressure.
In case the pump priming does not take place during the first pre-purging, with a consequent,
subsequent lock-out of the burner, rearm the burner's lock-out to restart, by pushing the button on the control box.
If, after a successful pump priming, the burner locks-out after the prepurging,
due to a fuel pressure drop in the pump, rearm the burner's lock-out to restart the burner.
Do never allow the pump working without oil for more than three minutes.

! **NOTE:** before starting the burner, check that the return pipe is open. An eventual obstruction could damage the pump sealing device.

START-UP OIL SIDE

Adjusting the intermediate burner capacity

In order to adjust intermediate capacity of the burner use the selector on position 0 to stop the stroke and regulate the cam on the different screw position.
The adjustment shall be done according to the drawing in order to have the correct combustion value in each points "+/-" switch (different screw positions).
Using a suitable Allen wrench, change the position of the cam guide blade; if you screw it down, the flow rate is reduced; if you unscrew it, the flow rate increases.

WARNING: the variable profile of the cam shall have a normal proportional curvature in order to have good combustion values and reduce its mechanical stress breakdown.

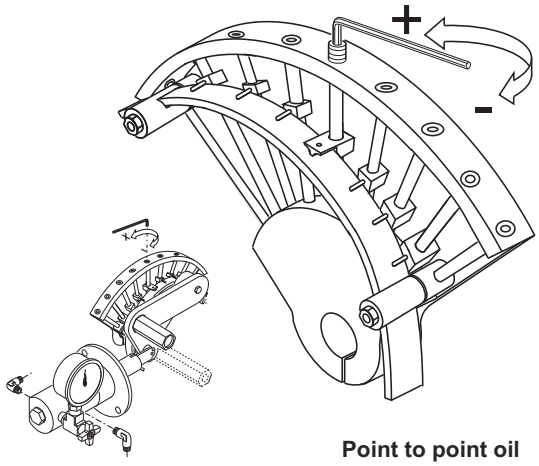

Point to point oil cam configuration

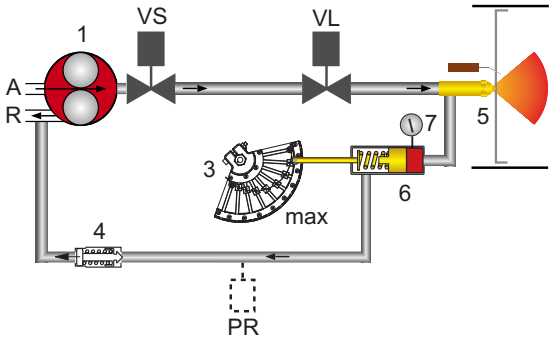

! **WARNING:** Once the setting on the oil has been completed make sure that you close the manometer – pressure switch tap.

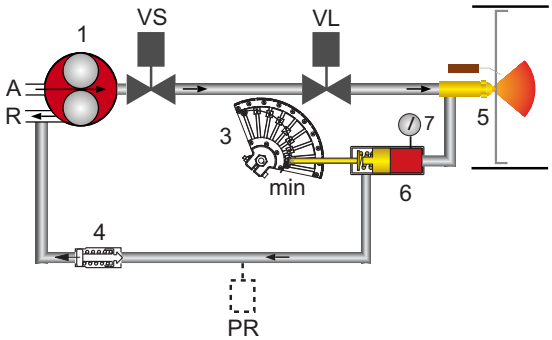

LEGEND

1. Oil pump
VS. Oil safety valve
3. Adjusting cam
4. Check valve
VL. Working valve
PR. Pressostat (optional)
5. Nozzle
6. Pressure regulator
7. Manometer – pressure gauge

Servomotor SQM50 - Oil side final setting

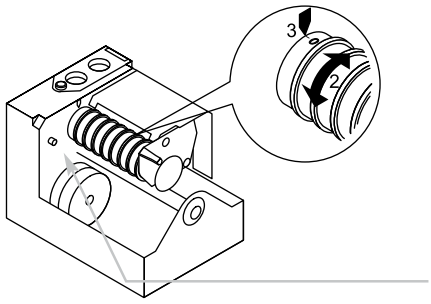

Once the point to point oil cam setting has been completed we need to set the final minimum output of the burner using the servomotor cam VI (low flame oil).
Using the suitable key regulate the grades ("+/-" switch).
The low flame position must be higher than the ignition position cam on the servomotor.
Turn the burner off and start it again in order to check if the burner start properly otherwise adjust the ignition oil cam number IV.

OIL SETTING ENDED: switch the selector to automatic position.

! **WARNING: Do not use the button cam drum release button.**

START-UP GAS SIDE

Fuel selection - Start-up

Select the gas operation in order to proceed with start up on the gas side. On the selector put the operation on minimum capacity.

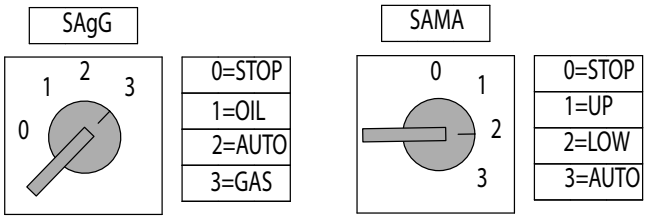

0 : operating elements locked in an intermediate position.
1 : operation on maximum capacity
2 : operation on minimum capacity
3 : automatic operation

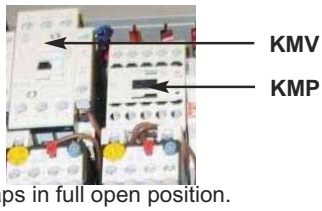

! **KMV contactor:** check the air fan motor rotation.
If not correct invert the two phases on the power supply.

START UP THE BURNER

The control box starts the pre-purge cycle, the fan motor and opens the air flaps in full open position.
At the end of pre-purging, the control box drives the servomotor into the ignition position and starts the ignition transformer.
After a few seconds the control box opens the pilot valves and starts the pilot flame.
After the flame stabilisation the control box opens the main valves and the burner goes in the low flame and the pilot switch off.
In case of faulty ignition, the control box switches the burner into safety condition, in such a case you must rearm the burner.
Gradually go step by step using the selector on position 0 to stop the flame, from the low flame to the high flame in order to have a stable flame.
The flame stabilisation can be achieved by adjusting the gas flow on the gas train (REFER TO THE GAS TRAIN MANUAL)
When the servomotor arrives at 90° you have completed first tuning air and gas flow according to the boiler capacity required.
Check the combustion values throughout the servomotor stroke.

Adjusting the maximum air flow rate

In order to adjust the maximum air flow rate see figure with selector in maximum operation. Loosen the nut holding the air damper transmission rod and correct air flow till you reach the combustion values suggested by reading the value on the combustion analyser. If you do not reach acceptable air flow rate you shall adjust the firing head. Move the head forward to increase air flow backwards to reduce.

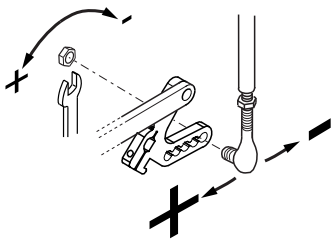

Firing head setting

The firing head is pre-adjusted at the 50% from the factory. The setting fully open enables to reach the full power of the burner and full close to reach the minimum power of the burner.
The optimal position depends on the output that we need to reach but the default setting shall be modified only when you are not able to reach the suggested combustion value by adjusting the air flow in the maximum flame.

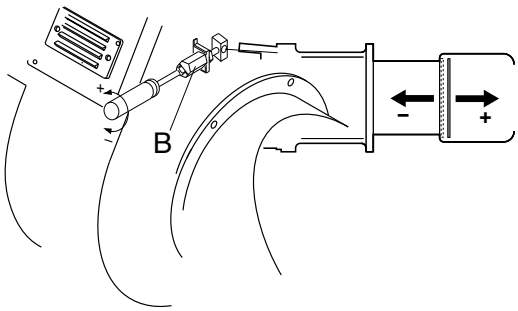

Servomotor SQM50 - Air damper motor pre-setting

The cams of the servomotor are set from the factory in order to start the burner and reach the maximum output.
The following setting are the standard one:
I. High flame position 90° (maximum value 70°).
II. Air flap position in standby 0° (minimum value 0°).
III. Ignition position gas 15°.
IV. Ignition position oil 15°.
V. Low flame position gas 25° (can be modified depending on the minimum output of the boiler).
VI. Low flame position oil 25° (can be modified depending on the minimum output of the boiler).
VII. To VIII not used

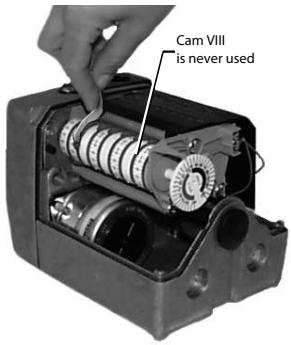

START-UP GAS SIDE

Adjusting the intermediate burner capacity

In order to adjust intermediate capacity of the burner use the selector on position 0 to stop the stroke and regulate the cam on the different screw position.
The adjustment shall be done according to the drawing in order to have the correct combustion value in each points “+/-“ switch (different screw positions).
Using a suitable Allen wrench, change the position of the cam guide blade; if you screw it down, the flow rate is reduced; if you unscrew it, the flow rate increases.

WARNING: the variable profile of the cam shall have a normal proportional curvature in order to have good combustion values and reduce its mechanical stress breakdown.

Point to point gas cam configuration

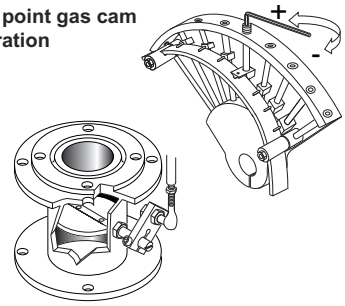

Pressure switch adjustment

AIR PRESSURE SWITCH CALIBRATION
The air pressure switch is provided for monitoring the pressure of the combustion air fan.
Unscrew screws A and B and remove cover C.
After the air and gas setting you have to calibrate the air switch with the burner working on the low flame by slowly turning the relative knob clockwise until the burner locks out.
Read the value and then decrease it by 15%.
Set the pressure switch to the minimum by turning knob D to position 1.
Start the burner and keep in low flame running, while checking that combustion is correct. Through a small cardboard, progressively obstruct the air intake until to obtain a CO2 increase of 0,5÷0,8% or else, if a pressure gauge is available, connected to pressure port E, until reaching a pressure drop of 1 mbar (10 mm of W.G.).
Slowly increase the adjustment value of the air pressure switch until to have the burner lockout. Remove the obstruction from the air intake, screw on the cover C and start the burner by pressing the control box rearm button.

WARNING: the air pressure switch shall prevent the air pressure to go below 80% from the adjustment value in order to prevent the CO in the fumes to exceed 1% (10000 ppm).
Using the analyser try to close the air inlet and check that the burner locks out before exceeding CO value of 1% in the fumes.

MIN GAS PRESSURE SWITCH
The gas pressure switch has the function to check that the gas pressure before the gas valve does have the minimum pressure to make the burner running correctly.
Unscrew off and remove cover M. - Set knob N to a value equal to 60% of gas nominal feed pressure (i.e. for natural gas nom. pressure = 20 mbar, set knob to a value of 12 mbar; for LPG nom. pressure of G30/G31- 30/37 mbar, set knob to a value of 18 mbar).

MAX GAS PRESSURE SWITCH (KIT)
The maximum gas pressure switch has the function to check that the gas pressure after the gas train and before the head does not exceed the pre-set limits.
Max gas pressure switch: it is available as a kit for different pressure.

Air pressure switch

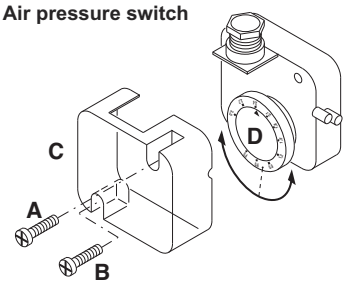

Gas pressure switch

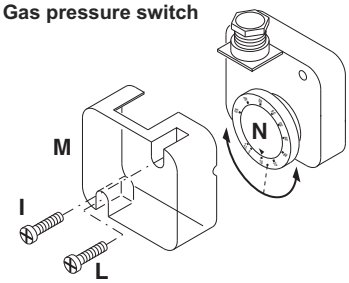

Servomotor SQM50 - Gas side final setting

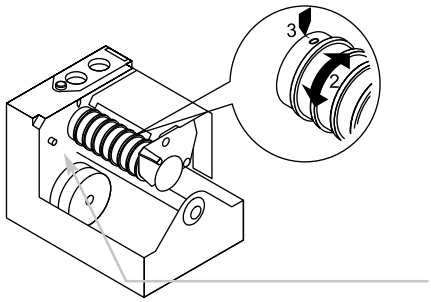

Once the point to point gas cam setting has been completed we need to set the final minimum output of the burner using the servomotor cam V (low flame gas).
Using the suitable key regulate the grades (“+/-“ switch).
The low flame position must be higher than the ignition position cam on the servomotor.
Turn the burner off and start it again in order to check if the burner start properly otherwise adjust the ignition gas cam number III.

GAS SETTING ENDED: switch the selector to automatic position.

! **WARNING: Do not use the button cam drum release button.**

MAINTENANCE PROGRAM

! Burner and boiler servicing must only be carried out by authorised qualied personnel at least once a year.
Depending on the type of installation, shorter maintenance intervals may be necessary.
The system operator is advised to take out a maintenance contract to guarantee regular servicing.
WARNING: Use original spare parts.

SAFETY WARNINGS:
1. Turn off the power supply and protect the system from accidental start-up
2. Cut oil and gas supply
3. Make sure there is no residual power in the system and that the actions in points 1 and 2 have been completed
4. Before opening the burner casing, ensure that the fan motor has stopped completely

Failure to observe any of these instructions will result in the risk of death or injury!

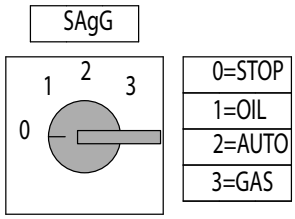

WORKS RECOMMENDED AS PART OF ANNUAL BURNER MAINTENANCE:

- Emergency stop button function check
- Check burner start characteristics
- Run burner test and input measurement in the boiler room
- Clean the combustion components and replace defective parts if necessary
- Check the combustion head components and make sure that all components are in good condition otherwise replace them
- Replace ignition electrodes and nozzle if necessary and check their correct position after any intervention
- Flame monitor and automatic combustion control unit function check
- Clean the fan wheel and the housing and grease rotating parts if necessary
- Clean the oil filter cartridge with gasoline periodically and check the tightening of the O rings, replace them if necessary
- Perform visual inspection of gas lines in the boiler room and check the gas flow
- Clean the gas filter cartridge with air periodically, replace it if necessary
- After the cleaning of the components of the gas train perform the leakage test
- Make visual inspection of the burner's electrical components and eliminate malfunctions if necessary
- Burner safety devices function check (air pressure/gas pressure switches)
- Commissioning the burner and correct the adjustment values if necessary

NOTES ON REASSEMBLING: Perform the described step in reverse order and make sure to refit components as they were originally assembled and the system is free from leaks. Use only original spare parts.

DRAW UP A MEASUREMENT REPORT ACCORDING TO THE LOCAL REGULATION AND CODES OF PRACTISE OF THE COUNTRY

EXHAUST GAS LOSS
Exhaust gas loss by way of free heat will occur as a result of the temperature difference between the fuel-air mixture entering the furnace chamber and the gases discharged. Any increase in the excess of air and the resultant higher exhaust gas volume will cause the exhaust gas loss to rise. The exhaust gas loss can be calculated as follows:

$$q_A = (t_A - t_L)\frac{A_1}{CO_2} + B$$

q_A = exhaust gas loss [%]
t_A = exhaust gas temperature [°C]
t_L = combustion air temperature [°C]
CO_2 = volumetric content of carbon dioxide [%]

	Light oil EL	Heavy oil S	Natural gas	Town gas	LPG
A1	0,50	0,490	0,370	0,350	0,420
B	0,007	0,007	0,009	0,011	0,008

Example
Data measured in natural gas mode:
CO_2 content of exhaust gases: 10,8%
Exhaust gas temperature: 195°C
Air intake temperature: 22°C

The exhaust gas loss can be calculated as follows:

$$q_{Af} = (195\text{-}22)(\frac{0,37}{10,8} + 0,009) = 7,48\%$$

Data measured in fuel oil mode:
CO_2 content of exhaust gases: 12,8%
Exhaust gas temperature: 195°C
Air intake temperature: 22°C

The exhaust gas loss can be calculated as follows:

$$q_{Af} = (195\text{-}22)(\frac{0,49}{12,8} + 0,007) = 7,83\%$$

MAINTENANCE PROGRAM

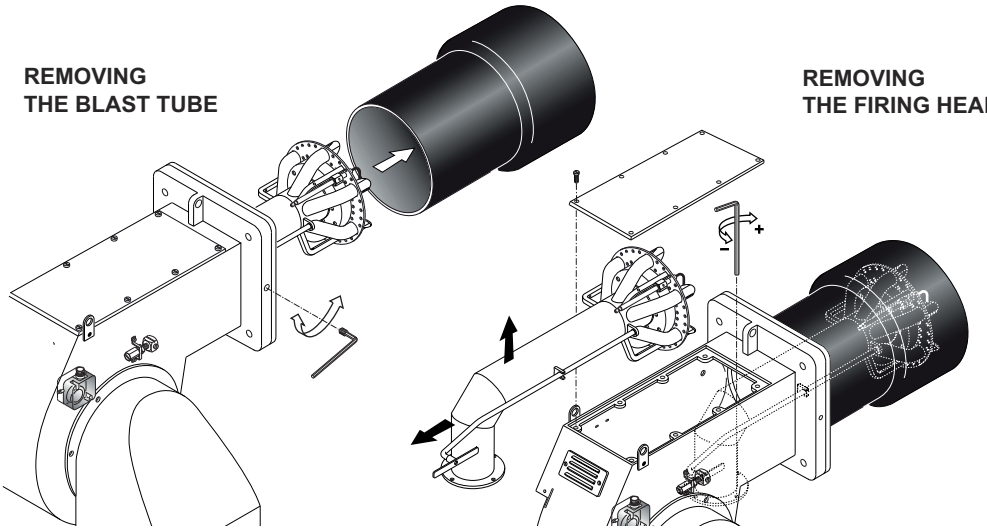

POSITION OF ELECTRODES

ATTENTION:
to remove the nozzle use the suitable box wrench taking care to not damage the electrodes.
Check the position of the electrodes after any intervention as wrong position could cause ignition troubles.

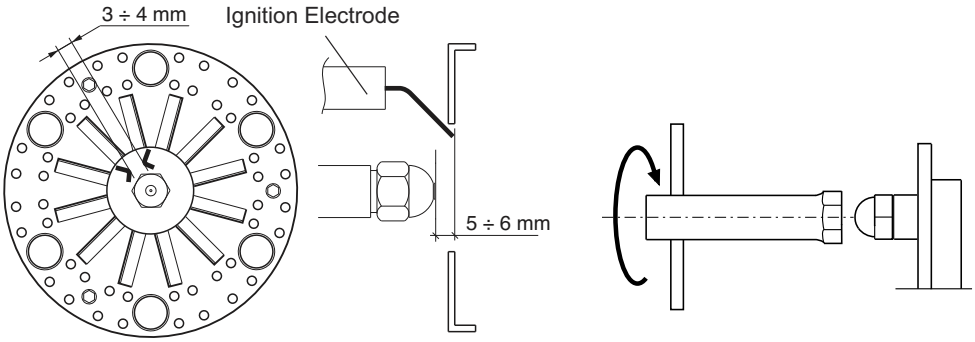

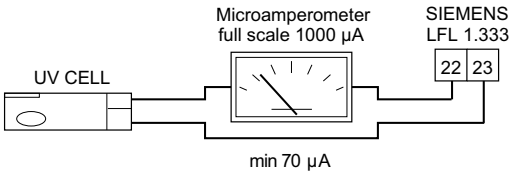

The detector current is checked by inserting a micro ammeter (scale 1000 µA - d.c.) in series with the UV cell.
The flame detector current has to been > 70 µA.

GAS FILTER CLEANING - GAS PILOT FILTER CLEANING

ATTENTION: Periodically clean oil cartridge with gasoline and the gas filter cartridge with air and replace them if it is necessary!

Check and clean the gas filter in the pilot gas valve

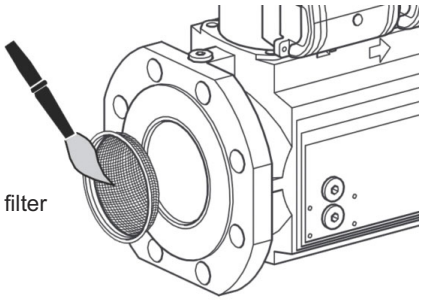

TROUBLESHOOTING INSTRUCTIONS

The list of faults/causes/possible solutions for a set of main failures is a guideline for professional personell authorised to carry out service and maintenance.
Irregular burner operation or malfunction: check that every adjustment parameter is correctly set as per instruction on this manual.

TROUBLESHOOTING TABLE OIL OPERATION															
STATUS	CAUSES	REMEDIES	Burner doesn't start	Fuel pump noisy / unprimes / leaks	Burner starts with continuous pre-purge	Burner starts and then goes into lock-out	Pilot Ignition failure (1st safety time - LFL only)	Main Ignition failure (2nd safety time)	Burner lock-out after flame appereance / pulsation	Flame control repeats the cycle and doesn't give consent	Smoke in flame - dark Bacharach	Burner doesn't switch into Hi flame	Burner lock-out during operation	LFL MULTICALOR MULTIFLAM	LAL MAIOR OILFLAM
HEAVY OIL	Preheating period too long	Check GEFRAN controller, replace if necessary	X								X		X	YES	YES
	Defective Gefran controller	Replace control unit	X								X		X	YES	YES
PRE-START (MISSING SIGNALS)	Defective control box unit	Replace control box unit	X			X	X	X	X	X		X	X	YES	YES
	No electrical power supply Wrong electrical connections	Check switches/contactors Check connections	X											YES	YES
	Air pressure switch not "closed"	Check contacts	X											YES	YES
	Boiler thermostats open	Check contacts	X											YES	YES
	Fan motor overload intervention	Replace fuse	X											YES	YES
	Auxiliaries fuses interrupted	Replace fuse	X											YES	YES
	Servomotor [CLOSE] position switch not reach	Check servomotor settings	X											YES	YES
PRE-START (OIL PUMP)	High vacuum in oil pipe due to dirty filter	Clean filter or replace filter cartridge		X							X			YES	YES
	Burner is higher than oil tank by more than 3 m	Reduce Height or prepare a ringline pump		X							X			YES	YES
	Air in the oil pipeline	Re-tighten pipe connections		X										YES	YES
SEQUENCE START	Servomotor [OPEN] position switch not reach	Check servomotor settings			X									YES	YES
	Servomotor [MIN] position switch not reach	Check servomotor settings			X									YES	YES
	Extraneous Light	Eliminate light source				X								YES	YES
	Fuel solenoid valve fails to close (Light oil Burner - direct ignition)	Clean valves or replace if necessary				X								YES	YES
LACK OF AIR	Air pressure switch fail to connect to Terminal 14	Check contacts				X								YES	NO
	Fan contaminated/dirty	Clean fan				X					X		X	YES	NO
	Fan motor rotation direction not correct	Check direction and contactor				X					X		X	YES	NO
IGNITION & FLAME STABLISATION PERIOD	Flame supervision circuit internal test failed	Replace control unit				X								YES	NO
	Pilot flame failure - Pilot gas valves not open	Check valves contacts / replace if necessary					X							YES	NO
	Pilot flame establish - weak flame signal	Check flame sensor Replace if necessary					X							YES	NO
	Ignition transformer faulty	Replace					X	X						YES	YES
	Ignition cable & electrodes defective	Replace					X	X						YES	YES
	Electrode bad position	Check setting / replace if necessary					X	X						YES	YES
	Fuel oil solenoid valve fails to open	Check contacts and clean valves. Replace solenoid coil if necessary						X						YES	YES
ONLY FOR OIL BURNER	Air pressure switch not close, Oil pump contactor open	Check air pressure switch contacts						X						NO	YES
	No oil supply	Check shut-off valves Check Pump, replace if necessary						X						NO	YES
	Oil pump coupling broken	Replace pump unit						X						NO	YES
COMBUSTION	Flame sensor signal failure	Clean, re-position or replace if necessary				X	X	X	X				X	YES	YES
	Head adjustment not correct	Check settings							X		X		X	YES	YES
	Oil/Air mixture setting not correct	Check settings							X		X		X	YES	YES
	Dirty combustion head	Clean or replace disk if necessary							X		X		X	YES	YES
	Nozzle dirty or damaged	Clean or replace nozzle if necessary							X		X			YES	YES
	Fuel pressure inappropriate	Adjust pressure or replace pump if necessary							X		X		X	YES	YES
	Capacity reduction	Check filter, pump pressure and nozzle. Replace item if necessary									X			YES	YES
	Load control device does not close	Check load control, replace if necessary										X	X	YES	YES

TROUBLESHOOTING INSTRUCTIONS

The list of faults/causes/possible solutions for a set of main failures is a guideline for professional personell authorised to carry out service and maintenance.
Irregular burner operation or malfunction: check that every adjustment parameter is correctly set as per instruction on this manual.

TROUBLESHOOTING TABLE GAS OPERATION													LFL
STATUS	CAUSES	REMEDIES	Burner doesn't start	Burner starts with continuous pre-purge	Burner starts and then goes into lock-out	Pilot Ignition failure (1st safety time)	Main Ignition failure (2nd safety time)	Burner lock-out after flame appereance / pulsation	Flame control repeats the cycle and does not give consent	Combustion emission not satisfactory	Burner doesn't switch into Hi flame	Burner lock-out during operation	MULTICALOR MULTIFLAM BLU
PRE-START (MISSING SIGNALS)	Defective control box unit	Replace control box unit	X		X	X	X	X	X		X	X	YES
	No electrical power supply Wrong electrical connections	Check switches/contactors Check connections	X										YES
	Air pressure switch not "closed"	Check contacts	X										YES
	Boiler thermostats open	Check contacts	X										YES
	Fan motor overload intervention	Replace Fuse	X										YES
	Auxiliaries fuses interrupted	Replace Fuse	X										YES
	Servomotor [CLOSE] position switch not reach	Check servomotor settings	X										YES
	Minimum gas pressure swtich not close	Open manual ball valve, check pressure switch settings, contacts, replace if necessary	X										YES
LEAKAGE CHECK	Leakage test successful - signals not arrive to control unit	Check contacts	X										YES
	Leakage Test failure (VPS / VDK)	Clean valves or replace leakage controller if necessary	X										YES
	Leakage Test failure (LDU kit)	Check contacts, clean valves or replace leakage controller if necessary	X										YES
SEQUENCE START	Servomotor [OPEN] position switch not reach	Check servomotor settings		X									YES
	Servomotor [MIN] position switch not reach	Check servomotor settings		X									YES
	Extraneous light	Eliminate light source			X								YES
LACK OF AIR	Air pressure switch fail to connect to Terminal 14	Check contacts			X								YES
	Fan contaminated / dirty	Clean fan			X					X		X	YES
	Fan motor rotation direction not correct	Check direction and contactor			X					X		X	YES
IGNITION & FLAME STABLISATION PERIOD	Flame supervision circuit internal test failed	Replace control unit			X								YES
	Pilot flame failure - Pilot gas valves not open	Check valves contacts / replace if necessary				X							YES
	Pilot flame establish - weak flame signal	Check Ionisation or flame sensor Replace if necessary				X							YES
	Ignition transformer faulty	Replace				X	X						YES
	Ignition cable & electrodes defective	Replace				X	X						YES
	Electrode bad position	Check setting / replace if necessary				X	X						YES
	Main solenoid valve fails to open	Check contacts and clean valves Replace valves if necessary					X						YES
COMBUSTION	Flame sensor signal failure	Clean, re-position or replace if necessary			X	X	X	X				X	YES
	Head adjustment not correct	Check settings						X		X		X	YES
	Gas / Air mixture setting not correct	Check settings						X		X		X	YES
	Oscillating gas pressure	Install damping throttle (AGA 25) - order separately or reduce suppply pressure						X		X		X	YES
	Capacity reduction due to lower gas supply pressure	Check gas pressure, clean filter, replace cartridge if necessary								X			YES
	Gas pressure regulator not regulating	Replace regulating valve								X			YES
	Load control device does not close	Check load control, replace if necessary									X	X	YES

OPERATING TROUBLE

In case of operating trouble it should be checked whether the system is in proper working order.

Make a check for the following:
1. Availability of fuel.
Availability of gas in the line at sufficiently high pressure.
Availability of fuel oil in the tank (for dual fuel burner).
Correct position of fuel selector switch.
2. Availability of electric power in the burner system.
3. Proper functional order and setting of all control and safety instruments such as temperature controller, safety limiter, water failure cut-out, electrical limit switches, etc.
If the trouble is not found to be due to any of the above-mentioned points it will be necessary to test the burner functions very carefully.

Prevailing conditions:
The burner will be found to be out of operation and in faulty and interlocked position.

Proceed with searching for the cause of the trouble and eliminate it. Unlock the control box by pressing the fault eliminate key and start the burner.
Do not press the fault eliminate key longer than 10 seconds.
The start-up program will be initiated and should be carefully monitored.
The possible cause of the fault may be quickly found by reference to the fault indicator of the control box and watching the start-up and operating program.

Control program in the case of trouble and fault indicator LFL 1... / LGK 16...

LFL 1... / LGK 16...

a-b Starting program

b-b' In a number of time versions; idle steps of the program unit to self-stop after burner start-up (b' = operating position of program unit)

b(b')-a After-flushing program after regular stop. In the starting position "a" the program unit will automatically stop or initiate an immediate restart of the burner, e.g. after a fault has been eliminated

• Duration of the safety period for single-tube burners

•• Duration of the safety period for burners with ignition gas valve

Basically, any type of trouble will result in the immediate stop of the fuel supply.
At the same time, the program unit and consequently the fault indicator will stop.
The type of trouble can be identified by the symbol opposite to the reading mark of the indicator:

◄ **No start**, e.g. because the "CLOSED" signal from the "Air Damper CLOSED" limit switch is missing or a contact is not closed between terminals (12) and (4) or (4) and (5); or the contacts of all control and safety units in the controlled system are not closed (e.g. gas pressure or air pressure switches, temperature or pressure switches, temperature or pressure regulators).

▲ **Operating stop** because the "OPEN" signal from the "Air Damper OPEN" limit switch is missing.
Check and adjust the limit switch concerned.

P Shut-off on trouble because there is not air pressure signal at the beginning of the air pressure check.
Any air pressure failure after this time will also lead to a shut-off on trouble.

■ **Shut-off on trouble** because of a fault in the flame monitoring circuit.

▼ **Operating stop** because the position signal of the "Partial Load" limit switch (air damper in "Partial Load" position) is not available on terminal (8). Check and adjust the limit switch concerned.

1 Shut-off on trouble because a flame signal is not available on the expiry of the (1st) safety time.

Any failure of the flame signal on the expiry of the safety time will also lead to a shut-off on trouble.

2 Shut-off on trouble because the flame signal has not occurred on the expiry of the (2nd) safety time (flame signal of main flame with burners having an ignition gas valve).

| **Shut-off on trouble** because the flame signal failed during burner operation or a lack of air has occurred.

◄ **Shut-off on trouble** during or after the control program flow due to external light (e.g. by flame not extinguished, leaking fuel valves) or a faulty flame signal (e.g. fault in flame monitoring circuit, or similar); see flame monitor.

If the shut-off on trouble occurs at any other time between start and pre-ignition that is not identified by a symbol as above, this will normally be due to an early flame signal which is considered to be a faulty flame signal.

The control box may be unlocked immediately after a shut-off on trouble using the unlock button with integrated fault signal lamp or an external switch.
After it has been unlocked (and after a defect with resultant operating stop has been eliminated and after a voltage failure), the program unit will in any case return to its starting position with voltage being only supplied to terminals 7, 9, 10 and 11 as preset by the control program. It is only at this stage that the program of the control box will restart the burner.

APPENDIX

Control box - Damper actuators

CONTROL BOX LFL 1.../LGK...

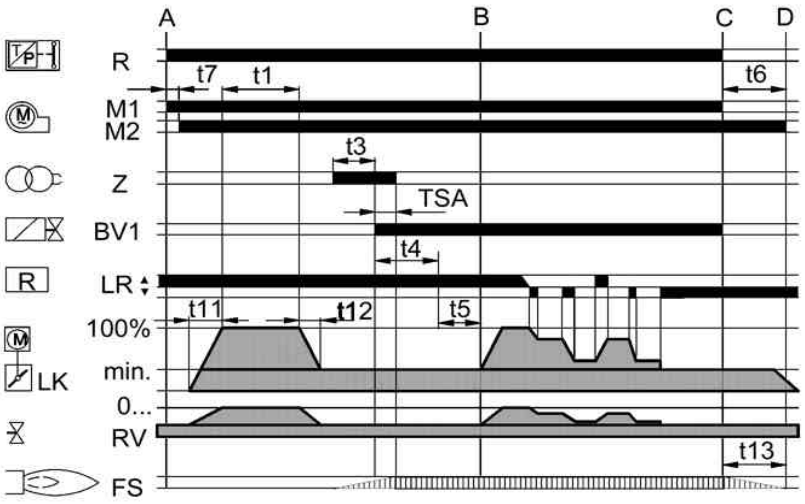

The LFL 1…/LGK... type controller is designed to control and monitor burners working according to a stepwise or modulating principle. A detailed functional description with technical data and project planning information with respect to the automatic combustion controllers can be found in the annex and in the documents: LFL 1...-7451/LGK...

Functional diagram
LFL 1.../LGK...

A: Starting type interval
A-B: Flame development interval
B: Burner has reached operating position
B-C: Burner operation (heat generation)
C-D: Regular shut-off
t1: Pre-ventilating time
t2: Safety time
t3: Pre-ignition time
t4: Fuel valve enable
t5: Load regulator enable
t11: “OPEN” run time of air damper
t12: “CLOSE” run time of air damper

R: Temperature or pressure controller
M: Fan motor
Z: Ignition transformer
BV: Fuel valve(s)
LR: Load regulator
LK: Air damper
RV: Steadily adjustable fuel valve
FS: Signal of flame

DAMPER ACTUATORS SQM50...

Description
The SQM actuator is intended for use with two-stage sliding or modulating oil, gas or dual-fuel burners. The reversible actuator is fitted with a synchronous motor which drives a shaft via a gearbox. The shaft end carries a coupling to drive the fuel and combustion air controlling element.
The SQM actuator has been designed for dual-wire control by controller or switching units with change-over contacts.
Potentiometers can be installed for a range of applications on customer’s request.
The limit and auxiliary switches are set by means of manually adjustable latching cam plates. Scales are fitted between the disks to facilitate the selection of the switching points.
The cam plates are provided with a small pointer for indicating the switching point of a scale between the setting ranges.
An additional scale fitted to the end of the cam roller serves to indicate the position of the actuator.
The drive unit may be disconnected from the controlling element by changing over a rocker arm mounted to the gearbox.
This will allow any desired position of the controller plate to be selected by hand. Drive and output will be coupled in the vertical position of the rocker arm.
The fuel-air curve should be set over the full range of the cam plate so that operating safety will be retained also when the limit switch is overrun.

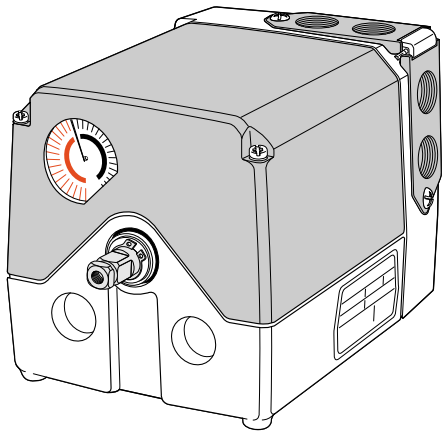

APPENDIX

Fluidics nozzle chart

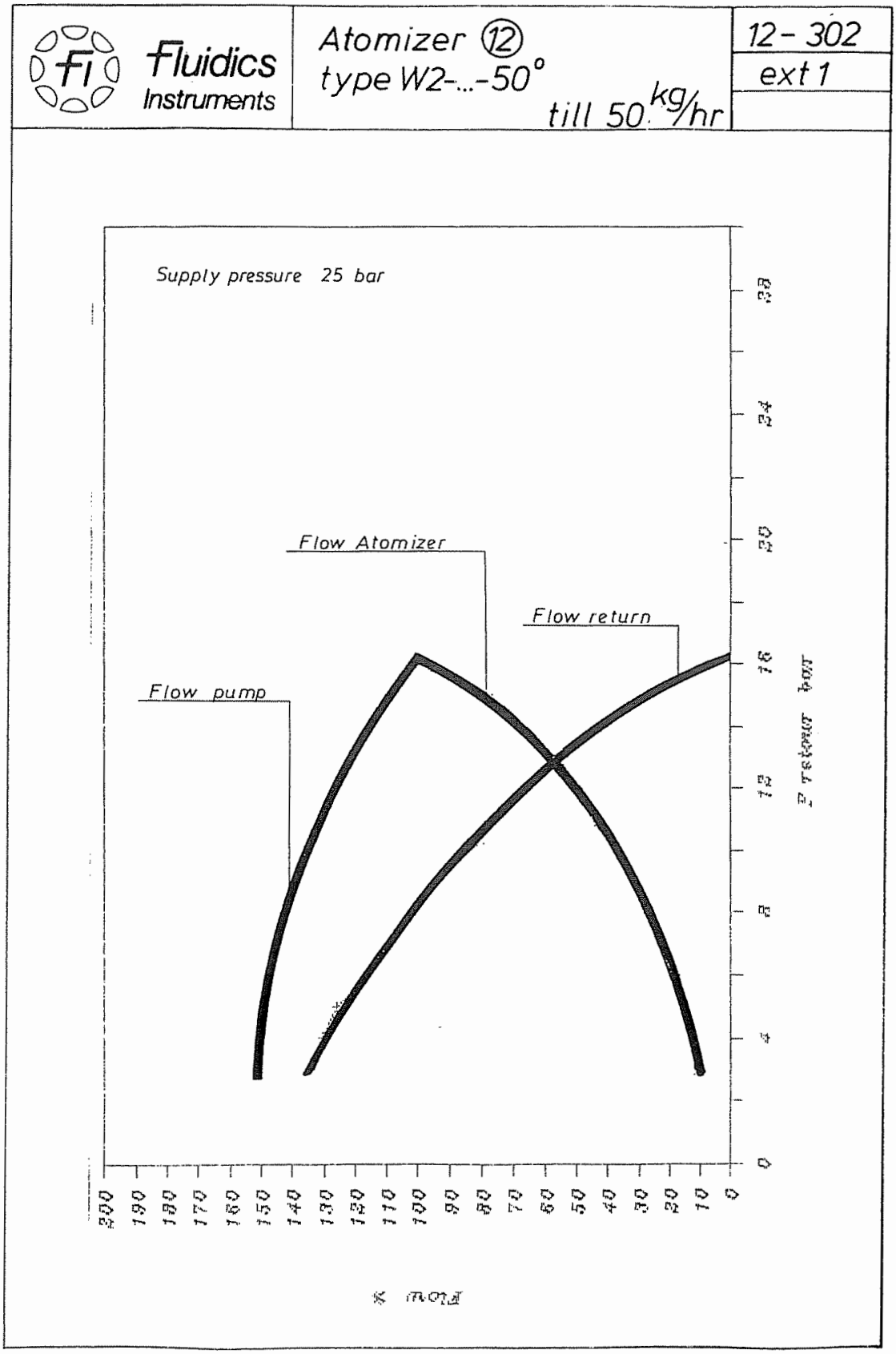

APPENDIX

Fluidics nozzle chart

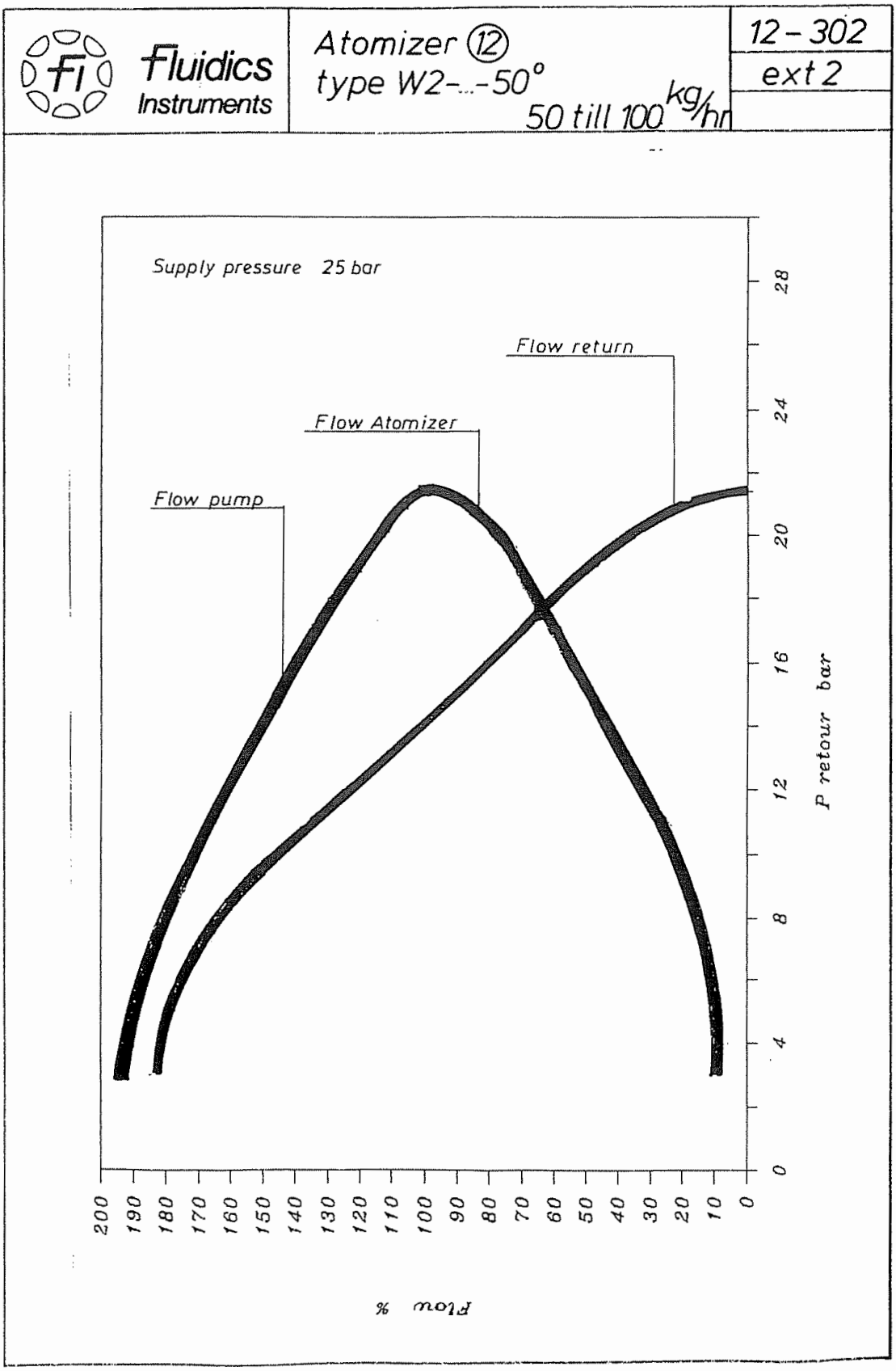

APPENDIX

Fluidics nozzle chart

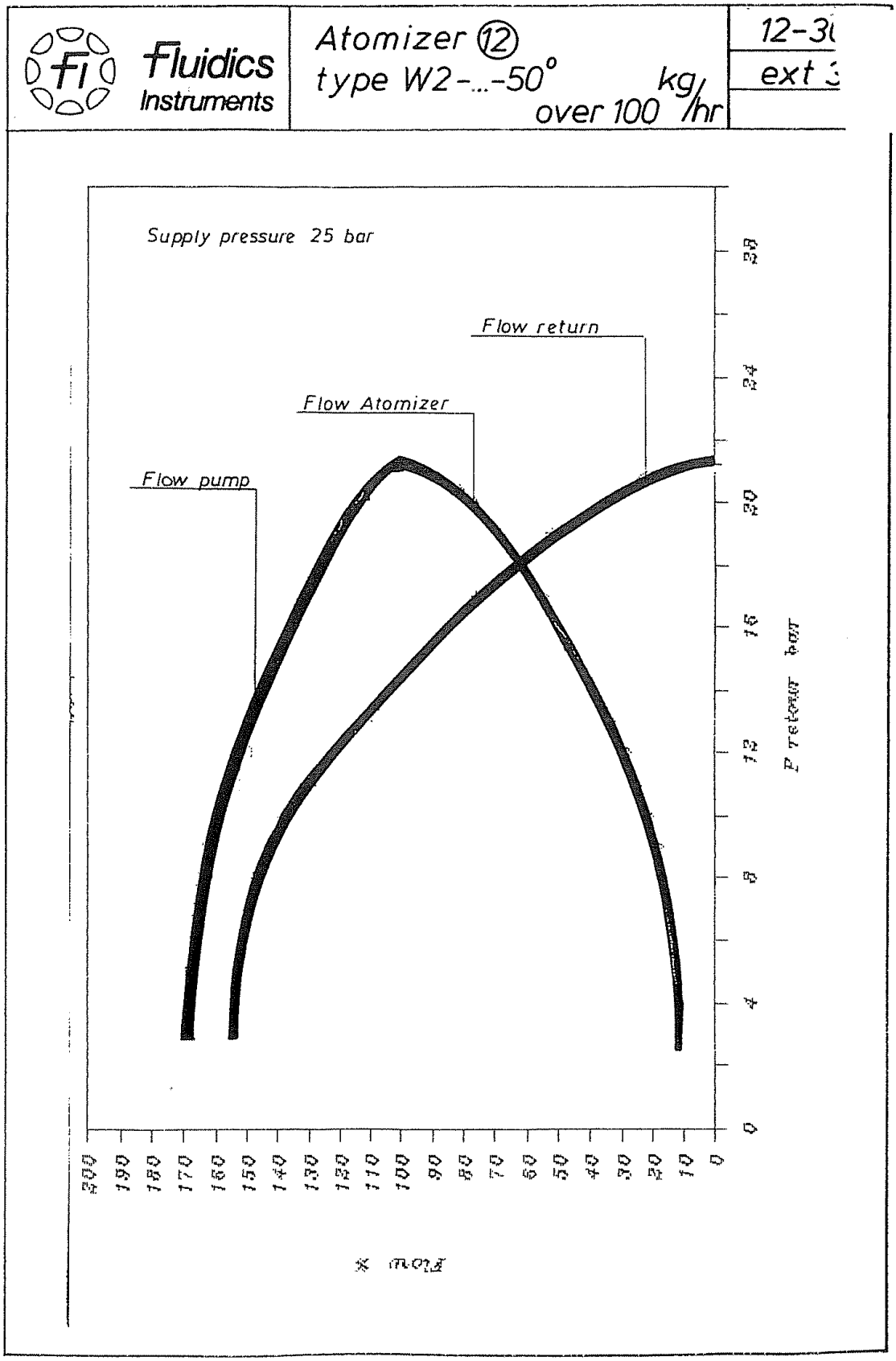

Return pressure [bar]

Nozzle kg/h		Bar	3	4	5	6	7	8	9	10	11	12	13	14	15	16	17	18	19	20	21	22	23	24	25	26	27	28	29
100	A	20	28	28	29	29	30	31	32	34	36	38	40	45	48	52	60	70	90										
100	B	20	250	250	250	250	248	245	240	235	220	200	190	180	170	155	135	115	90										
100	A	25	32	32	33	33	34	34	35	36	37	38	40	42	43	45	47	49	52	58	62	72	90						
100	B	25	290	290	280	275	273	270	268	265	255	248	240	225	215	200	190	180	170	160	140	125	110						
100	A	30	33	33	33	33	33	34	34	34	35	36	37	38	41	44	46	48	50	52	54	59	64	69	75	80	90	100	
100	B	30	310	310	310	308	306	304	302	300	295	290	285	280	275	265	255	245	235	225	210	200	190	180	170	150	140	120	
125	A	20	38	39	40	41	42	43	44	45	49	53	57	61	65	69	73	95	100										
125	B	20	300	300	300	295	285	275	275	265	245	230	215	200	185	174	153	140	120										
125	A	25	41	42	43	43	44	45	46	47	48	49	51	53	55	58	60	64	68	72	80	88	105	120					
125	B	25	330	330	330	330	325	320	315	310	305	295	290	285	280	265	240	230	220	200	190	170	150	130					
125	A	30	43	43	43	43	44	44	45	45	46	47	48	50	52	54	54	58	62	64	67	70	75	78	81	90	98	110	130
125	B	30	360	360	359	358	357	356	355	355	350	345	340	335	330	320	310	300	290	280	270	255	240	220	205	190	175	155	135
150	A	20	47	48	50	52	54	56	58	61	64	68	72	78	85	92	100	110											
150	B	20	280	279	278	277	276	276	275	268	260	240	230	215	190	175	160	145	125										
150	A	25	52	52	53	54	55	56	57	58	60	64	68	72	76	80	85	90	97	105	118	128	142						
150	B	25	325	325	310	300	300	290	285	280	275	270	265	260	255	250	240	230	220	210	190	170	160						
150	A	30	57	56	55	54	54	55	57	58	59	60	62	65	68	72	75	80	84	88	93	99	105	112	120	130	145	145	
150	B	30	340	340	340	338	336	334	332	330	328	324	320	315	310	300	290	280	270	260	250	240	230	220	210	190	180	160	
175	A	20	55	57	59	62	64	66	68	72	75	80	82	90	95	102	115	130	150										
175	B	20	285	280	275	270	270	265	265	260	255	250	245	240	230	200	185	170	150										
175	A	25	60	61	62	63	64	65	66	68	70	72	78	80	82	85	92	98	105	110	120	140	160						
175	B	25	330	330	330	330	325	325	325	320	315	310	300	295	280	270	260	252	245	235	225	200	180						
175	A	30	67	68	69	70	71	72	73	74	75	76	77	79	80	82	85	90	92	95	100	105	110	118	125	140	160	180	
175	B	30	360	360	360	355	355	350	350	345	345	340	340	335	330	330	325	320	310	300	290	280	270	260	250	240	225	200	
200	A	20	57	58	59	60	62	65	68	72	78	82	92	100	110	125	140	160	180										
200	B	20	350	350	350	350	345	345	340	330	325	300	285	275	260	245	220	200	190										
200	A	25	65	66	67	68	70	71	73	75	78	81	86	90	95	100	108	115	122	135	150	170	190						
200	B	25	400	400	400	400	390	385	380	375	370	365	360	350	340	330	320	300	285	270	260	245	220						
200	A	30	66	67	68	68	69	70	70	71	72	75	78	80	82	88	92	98	102	108	113	118	125	130	140	155	175	225	
200	B	30	460	460	460	460	458	456	452	448	440	430	420	405	390	380	370	360	350	342	335	325	315	300	290	275	260	245	
225	A	20	65	68	70	72	76	79	84	88	91	94	102	110	118	125	140	160	200										
225	B	20	420	410	405	400	390	382	376	370	350	345	335	320	300	280	265	250											
225	A	25	72	73	74	75	75	76	79	82	85	88	91	95	100	105	115	120	130	145	160	180	225						
225	B	25	475	468	460	460	460	455	455	450	440	430	420	410	400	380	365	345	325	315	300	275	260						
225	A	30	78	78	78	79	79	80	82	84	86	88	90	91	94	98	100	110	115	118	125	130	135	145	155	175	200	240	
225	B	30	510	510	505	505	503	500	495	490	485	480	475	470	465	455	445	435	425	410	392	380	370	360	350	325	300	275	
250	A	20	76	78	80	84	88	90	94	105	110	118	125	135	145	160	180	220											
250	B	20	425	415	408	403	400	380	375	365	355	345	330	315	300	285	275	250											
250	A	25	87	88	88	89	91	94	96	100	104	108	112	122	132	142	155	162	175	180	210	225	250						
250	B	25	480	475	475	470	465	465	460	455	445	435	425	415	405	382	365	350	345	330	320	300	280						
250	A	30	89	90	90	92	94	95	96	98	102	106	109	112	118	124	136	144	155	160	170	180	190	210	225	235	265		
250	B	30	520	518	518	515	512	512	510	510	508	504	500	490	480	470	460	450	440	430	420	410	390	375	360	340	320		

Supply: 25 bar Output [kg/h] A = nozzle output B = pump output

APPENDIX

Bergonzo nozzle tables

Return pressure [bar]

Nozzle kg/h		Bar	3	4	5	6	7	8	9	10	11	12	13	14	15	16	17	18	19	20	21	22	23	24	25	26	27	28	29
275	A	20	80	84	88	92	96	98	104	112	118	125	135	142	152	170	190	230											
275	B	20	475	475	470	466	460	445	430	420	405	390	370	360	350	330	310	285											
275	A	25	92	93	94	95	96	98	100	105	110	118	120	130	138	145	155	164	178	195	210	240	265						
275	B	25	525	525	525	520	515	510	505	500	495	490	480	470	460	450	440	425	400	375	350	325	300						
275	A	30	105	106	107	108	109	110	112	116	118	120	125	130	135	138	142	148	154	160	170	180	190	210	225	250	280		
275	B	30	600	600	600	600	600	600	595	590	585	580	570	565	543	530	515	500	490	475	465	450	440	425	400	380	360	330	
300	A	20	85	88	90	94	98	100	105	110	115	125	135	145	155	170	190	225	275										
300	B	20	480	480	480	476	470	465	460	450	435	415	400	375	365	350	325	300	280										
300	A	25	100	100	100	102	104	106	108	110	113	116	120	125	135	145	155	165	180	200	225	255	310						
300	B	25	550	550	545	540	535	530	520	510	500	490	482	475	463	450	440	430	415	390	370	350	310						
300	A	30	105	106	107	108	110	112	114	116	118	120	124	128	132	136	140	146	152	162	175	182	195	210	230	260	290	340	
300	B	30	625	625	625	620	615	610	605	600	590	580	570	560	550	540	530	520	510	495	480	465	450	430	410	390	375	350	
325	A	20	95	96	97	98	100	103	106	110	120	130	140	150	165	200	240	260											
325	B	20	550	545	540	535	530	520	510	500	480	460	440	420	400	375	355	325											
325	A	25	108	107	108	109	110	112	114	116	118	125	132	141	150	160	170	180	200	225	250	280	330						
325	B	25	630	630	630	625	620	615	610	605	600	585	570	565	535	520	500	480	460	440	410	385	360						
325	A	30	115	115	116	117	118	119	120	122	126	130	135	140	147	152	160	170	180	190	200	210	225	242	260	280	310	330	
325	B	30	720	715	710	705	702	700	700	690	680	670	655	620	610	600	580	570	550	520	500	480	460	440	420	400	380		
350	A	20	105	107	108	109	110	115	118	125	135	145	155	170	190	215	240	275											
350	B	20	590	580	570	560	550	540	530	500	480	465	450	440	400	375	360	340											
350	A	25	120	122	124	126	128	132	134	136	138	140	145	150	155	165	175	185	200	225	255	275	350						
350	B	25	620	620	620	615	614	612	610	605	600	595	575	565	550	530	510	490	470	450	410	380	360						
350	A	30	125	125	127	129	131	133	135	138	141	143	145	150	155	160	168	174	184	195	210	225	245	265	280	325	370		
350	B	30	710	710	708	704	703	702	700	690	680	670	660	650	640	630	615	600	580	560	540	520	500	475	440	425	400		
375	A	20	110	114	118	127	134	137	140	145	152	162	170	180	195	210	250	290											
375	B	20	600	590	580	575	560	550	540	530	515	500	485	465	450	425	400	370											
375	A	25	130	130	130	132	134	136	138	140	146	150	155	160	170	180	195	210	230	250	275	320	375						
375	B	25	690	690	680	680	670	660	650	630	620	610	600	580	560	540	520	500	485	465	450	425	400						
375	A	30	135	136	137	138	139	140	142	144	148	151	155	160	166	172	180	190	200	210	225	235	250	270	300	340	370		
375	B	30	790	780	770	760	750	740	730	720	710	700	690	682	674	666	658	650	632	615	600	575	545	530	525	480			
400	A	20	130	135	140	145	150	155	160	170	180	190	205	220	240	263	330	370											
400	B	20	650	650	650	640	630	620	610	600	580	560	540	500	475	420	420	380											
400	A	25	130	135	140	145	150	155	160	170	178	185	195	202	212	225	250	270	290	320	340	375	400						
400	B	25	725	725	720	720	715	710	705	700	690	670	640	630	600	580	565	550	525	480	470	450	425						
400	A	30	152	153	154	155	157	162	165	170	176	180	190	200	210	220	230	245	260	270	285	300	325	365	400	425	450		
400	B	30	845	840	835	830	825	820	815	810	805	800	790	780	760	740	715	690	660	650	620	600	580	560	540	520	500		
425	A	20	120	125	130	135	140	145	150	165	175	185	210	230	250	275	300	350											
425	B	20	700	690	680	670	660	650	635	615	600	575	550	525	505	465	435	400											
425	A	25	145	146	147	148	149	150	154	157	160	170	180	190	210	225	245	265	280	320	360	400							
425	B	25	800	800	800	790	780	770	760	750	725	700	685	670	650	625	600	575	550	510	480	450							
425	A	30	150	150	149	148	147	146	145	148	154	160	168	177	185	195	205	225	238	250	270	290	310	325	360	380	450		
425	B	30	880	875	870	865	860	855	850	840	830	820	810	800	780	760	740	720	700	685	670	650	610	590	570	550	510		

Supply: 25 bar

Output [kg/h]

A = nozzle output

B = pump output

Return pressure [bar]

Nozzle kg/h		Bar	3	4	5	6	7	8	9	10	11	12	13	14	15	16	17	18	19	20	21	22	23	24	25	26	27	28	29
450	A	20	130	135	140	145	150	158	165	175	185	200	210	230	255	280	320	375											
450	B	20	700	690	680	670	660	650	630	615	600	580	550	520	490	460	425	400											
450	A	25	145	145	148	151	154	158	162	165	170	180	190	200	220	240	255	280	310	350	390	450							
450	B	25	810	808	806	803	800	785	767	750	730	710	690	670	650	625	600	580	560	530	500	475							
450	A	30	155	156	157	158	160	162	165	170	175	180	187	194	200	210	220	230	240	260	275	290	310	340	375	420			
450	B	30	890	885	880	875	870	865	860	850	840	830	820	810	800	790	780	770	740	710	690	670	630	610	560	520	500		
475	A	20	145	148	152	158	165	170	180	195	200	210	230	250	275	300	340	410											
475	B	20	740	735	730	720	710	700	680	660	640	620	490	560	530	500	475	450											
475	A	25	140	162	164	166	168	170	175	180	188	195	205	215	225	245	265	280	305	340	380	480							
475	B	25	850	845	840	835	830	820	810	800	790	780	760	740	720	700	675	650	620	580	540	510							
475	A	30	170	171	172	173	174	176	177	178	180	186	194	200	210	225	235	245	255	275	285	305	330	365	400	460	540		
475	B	30	910	909	908	907	906	904	902	900	890	880	865	850	835	820	800	785	765	750	725	700	675	660	635	600	560		
500	A	20	150	155	160	167	174	180	190	205	220	235	250	275	300	350	400												
500	B	20	740	730	720	710	700	685	665	650	630	610	590	570	550	520	490												
500	A	25	174	175	178	180	185	190	195	200	210	220	230	245	250	265	285	315	350	380	435	510							
500	B	25	845	840	835	830	825	820	815	810	800	780	765	750	725	700	675	650	625	600	580	550							
500	A	30	180	185	190	195	200	206	212	218	225	238	242	250	262	275	288	300	316	332	350	375	400	425	475	520			
500	B	30	945	940	935	930	925	920	915	910	905	900	880	865	850	835	815	800	775	750	725	700	685	650	630	610			

Supply: 25 bar Output [kg/h] A = nozzle output B = pump output

APPENDIX

Pumps and pressure regulators

PUMP SUNTEC TA TECHNICAL DATA

Note: All TA models are delivered for two-pipe system (by-pass plug fitted in vacuum gauge port).
For one-pipe system, the by-pass plug must be removed and the return port sealed by steel plug and washer.

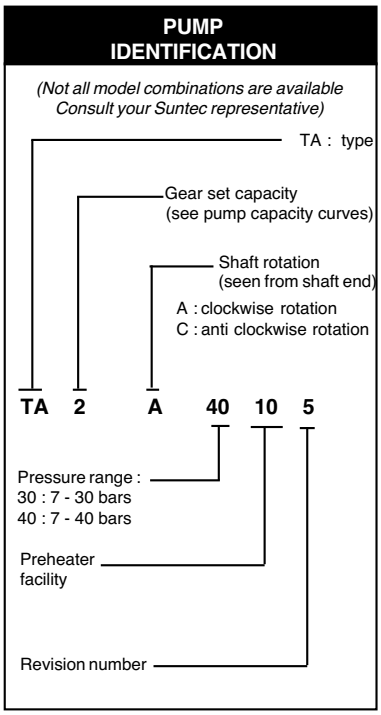

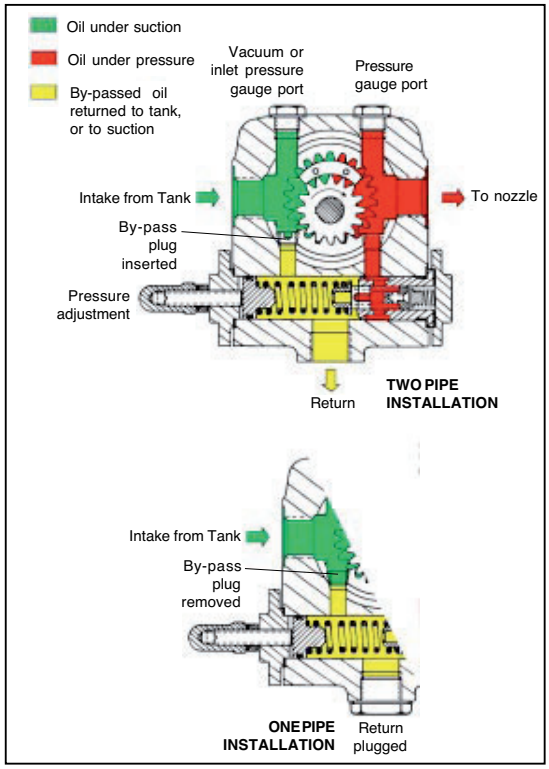

General

Mounting	Flange mounting
Connection threads	Cylindrical according to ISO 228/1
Inlet end return	G 1/2"
To nozzle	G 1/2"
Pressure gauge port	G 1/4"
Vacuum gauge port	G 1/4"
Shaft	Ø 12 mm
By-pass plug	Inserted in vacuum gauge port for 2 pipe system; to be removed with a 3/16" Allen key for 1 pipe system
Weight	5,4 kg (TA2) - 5,7 kg (TA3) 6 kg (TA4) - 6,4 kg (TA5)

Hydraulic data

Nozzle pressure ranges	30 : 7 - 30 bars 40 : 7 - 40 bars
Delivery pressure setting	30 bars
Operating viscosity	4 - 450 cSt
Oil temperature	0 - 140°C max. in the pump
Inlet pressure	light oil : 0,45 bars max. vacuum to prevent air separation from oil heavy oil : 5 bars max.
Return pressure	light oil : 5 bars max. heavy oil : 5 bars max.
Rated speed	3600 rpm max.
Starting torque	0,3 N.m

Choice of heater

Cartridge	Ø 12 mm
Fitting	according to DIN 40430, NFC 68190 (N°9 elec.)
Rating	80-100 W

Pump capacity

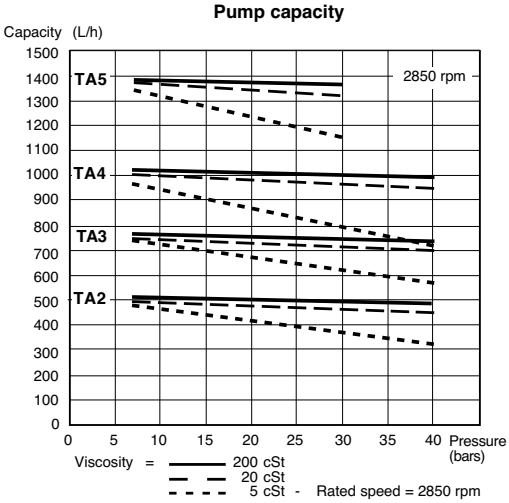

Data shown are for new pumps, with no allowance for wear.

APPENDIX

Electrical diagrams

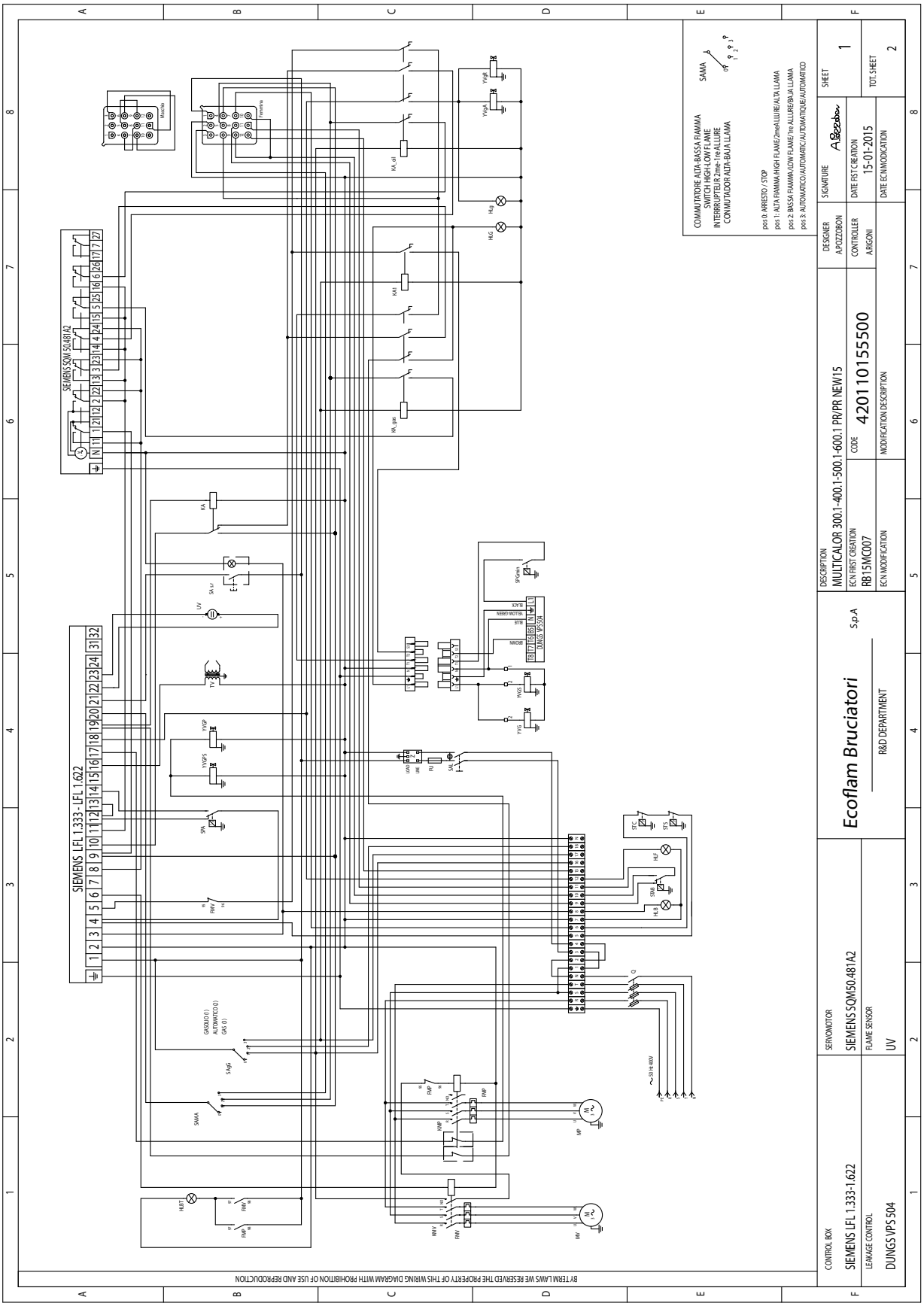

APPENDIX

Electrical diagrams

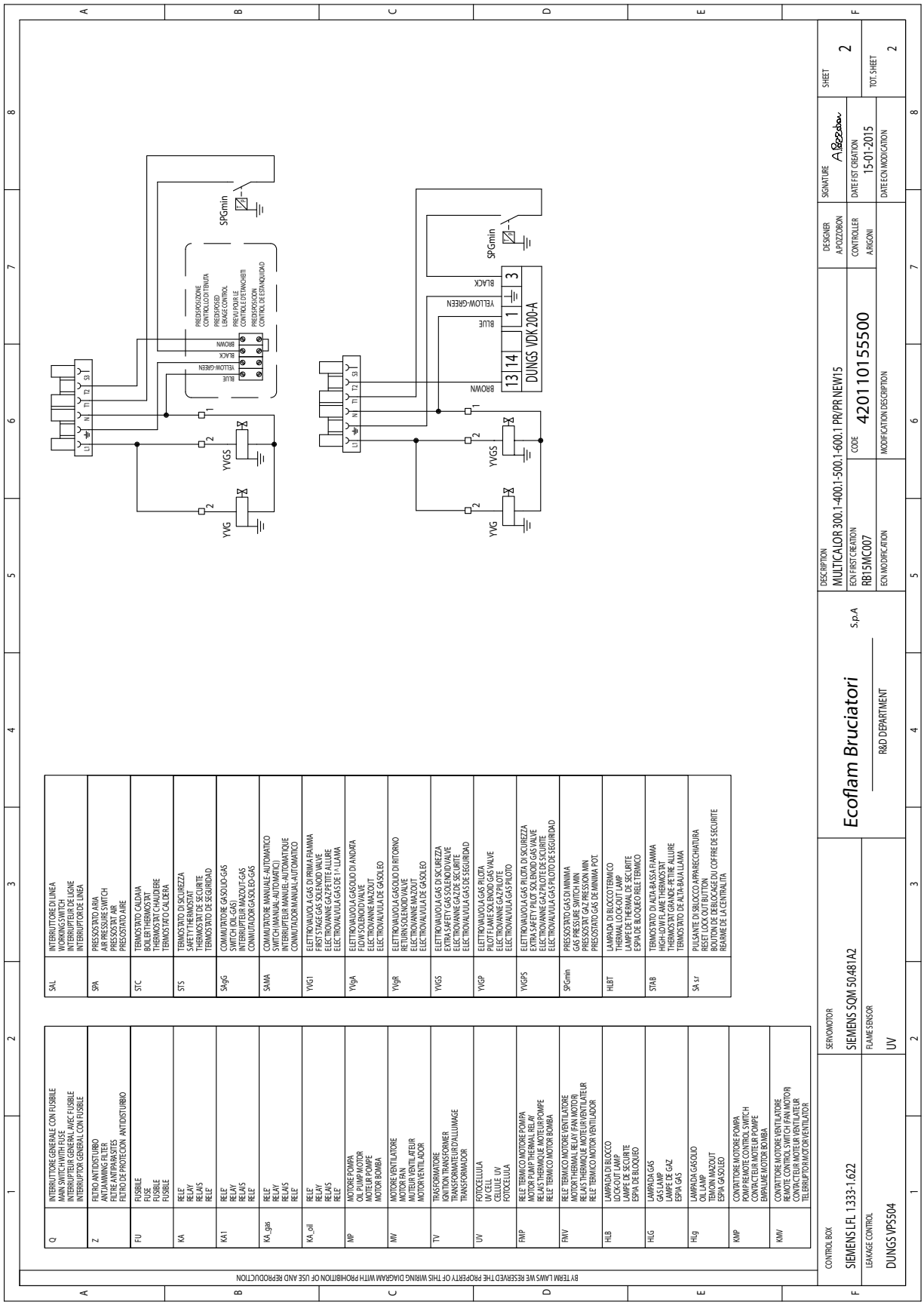

Q	INTERRUTTORE GENERALE CON FUSIBILE MAIN SWITCH WITH FUSE INTERRUPTEUR GENERAL AVEC FUSIBLE INTERRUPTOR GENERAL CON FUSIBLE	SAL	INTERRUTTORE DI LINEA WORKING SWITCH INTERRUPTEUR DE LIGNE INTERRUPTOR DE LINEA
Z	FILTRO ANTIDISTURBO ANTI JAMMING FILTER FILTRE ANTI PARASITES FILTRO DE PROTECCION ANTIDISTURBIO	SPA	PRESSOSTATO ARIA AIR PRESSURE SWITCH PRESSOSTAT AIR PRESSOSTATO AIRE
FU	FUSIBILE FUSE FUSIBLE FUSIBLE	STC	TERMOSTATO CALDAIA BOILER THERMOSTAT THERMOSTAT CHAUDIERE TERMOSTATO CALDERA
KA	RELE' RELAY RELAIS RELE'	STS	TERMOSTATO DI SICUREZZA SAFETY THERMOSTAT THERMOSTAT DE SECURITE TERMOSTATO DE SEGURIDAD
KA1	RELE' RELAY RELAIS RELE'	SAgG	COMMUTATORE GASOLIO-GAS SWITCH (OIL-GAS) INTERRUPTEUR MAZOUT-GAS CONMUTADOR GASOLEO-GAS
KA_gas	RELE' RELAY RELAIS RELE'	SAMA	COMMUTATORE MANUALE-AUTOMATICO SWITCH (MANUAL-AUTOMATIC) INTERRUPTEUR MANUEL-AUTOMATIQUE CONMUTADOR MANUAL-AUTOMATICO
KA_oil	RELE' RELAY RELAIS RELE'	YVG1	ELETTROVALVOLA GAS DI PRIMA FIAMMA FIRST STAGE GAS SOLENOID VALVE ELECTROVANNE GAZ PETITE ALLURE ELECTROVALVULA GAS DE 1ª LLAMA
MP	MOTORE POMPA OIL PUMP MOTOR MOTEUR POMPE MOTOR BOMBA	YVgA	ELETTROVALVOLA GASOLIO DI ANDATA FLOW SOLENOID VALVE ELECTROVANNE MAZOUT ELECTROVALVULA DE GASOLEO
MV	MOTORE VENTILATORE MOTOR FAN MOTEUR VENTILATEUR MOTOR VENTILADOR	YVgR	ELETTROVALVOLA GASOLIO DI RITORNO RETURN SOLENOID VALVE ELECTROVANNE MAZOUT ELECTROVALVULA DE GASOLEO
TV	TRASFORMATORE IGNITION TRANSFORMER TRANSFORMATEUR D'ALLUMAGE TRANSFORMADOR	YVGS	ELETTROVALVOLA GAS DI SICUREZZA EXTRA SAFETY GAS SOLENOID VALVE ELECTROVANNE GAZ DE SECURITE ELECTROVALVULA GAS DE SEGURIDAD
UV	FOTOCELLULA UV CELL CELLULE UV FOTOCELULA	YVGP	ELETTROVALVOLA GAS PILOTA PILOT FLAME SOLENOID GAS VALVE ELECTROVANNE GAZ PILOTE ELECTROVALVULA GAS PILOTO
FMP	RELE' TERMICO MOTORE POMPA MOTOR PUMP THERMAL RELAY RELAIS THERMIQUE MOTEUR POMPE RELE' TERMICO MOTOR BOMBA	YVGP5	ELETTROVALVOLA GAS PILOTA DI SICUREZZA EXTRA SAFETY PILOT GAS SOLENOID VALVE ELECTROVANNE GAZ PILOTE DE SICURITE ELECTROVALVULA GAS PILOTO DE SEGURIDAD
FMV	RELE' TERMICO MOTORE VENTILATORE MOTOR THERMAL RELAY FAN MOTOR RELAIS THERMIQUE MOTEUR VENTILATEUR RELE' TERMICO MOTOR VENTILADOR	SPGmin	PRESSOSTATO GAS DI MINIMA GAS PRESSOSTAT MINIMUM PRESSOSTAT GAZ PRESSION MIN. PRESOSTATO GAS DE MINIMA POT.
HLB	LAMPADA DI BLOCCO LOCK-OUT LAMP LAMPE DE SECURITE ESPIA DE BLOQUEO	HLBT	LAMPADA DI BLOCCO TERMICO THERMAL LOCK OUT LAMP LAMPE DE SECURITE THERMIQUE ESPIA DE BLOQUEO RELE TERMICO
HLG	LAMPADA GAS GAS LAMP LAMPE DE GAZ ESPIA GAS	STAB	TERMOSTATO DI ALTA-BASSA FIAMMA HIGH-LOW FLAME THERMOSTAT THERMOSTAT HAUTE-BASSE ALLURE TERMOSTATO DE ALTA-BAJA LLAMA
HLg	LAMPADA GASOLIO OIL LAMP TEMOIN MAZOUT ESPIA GASOLEO	SA sr	PULSANTE DI SBLOCCO APPARECCHIATURA RESET LOCK OUT BUTTON BOUTON DE DEBLOCAGE DU COFFRE DE SECURITE REARME DE LA CENTRALITA
KMP	CONTATTORE MOTORE POMPA COMPACTOR CONTROL SWITCH CONTACTEUR MOTEUR POMPE EMPALME MOTOR BOMBA		
KMV	CONTATTORE MOTORE VENTILATORE COMPACTOR CONTROL SWITCH FAN MOTOR CONTACTEUR MOTEUR VENTILATEUR TELERUPTOR MOTOR VENTILATOR		

APPENDIX

Spare parts list

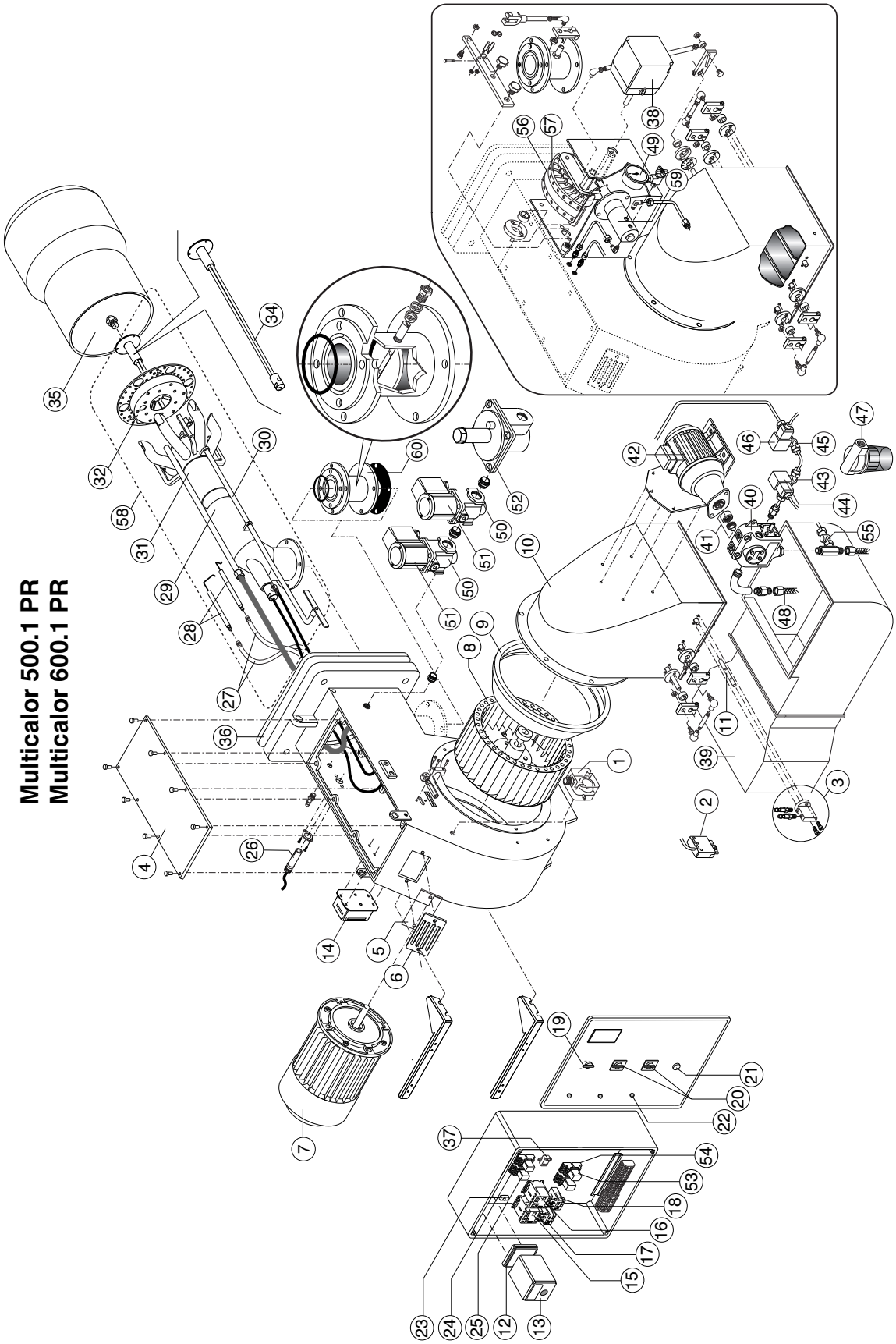

Ecoflam

APPENDIX

Spare parts list

			Multicalor 500.1 PR	Multicalor 500.1 PR S	Multicalor 600.1 PR
N°	DESCRIPTION		code	code: 3148241	code
1	AIR PRESSURE SWITCH	DUNGS LGW10 A2P	65323047	65323047	65323047
2	WIELAND PLUG	6 pin	65322072	65322072	65322072
3	AIR INTAKE SET		65322346	65324718	65322346
4	COVER		65324490	65324490	65324490
5	GLASS		65320487	65320487	65320487
6	PEED WINDOM FRAME		65320488	65320488	65320488
7	MOTOR	11 k W	65111471	65326333	-
		15 k W	-	-	65325246
8	FAN	360 x 135	65321801	65321801	-
		380 x 135	-	-	65321802
9	AIR CONVEYOR		65324264	65324264	65324264
10	AIR INTAKE		65324265	65324265	65324265
11	AIR INTAKE PIPE		65321230	-	65321230
12	CONTROL BOX BASE	SIEMENS	65320091	65320091	65320091
13	CONTROL BOX	SIEMENS LFL1.333	13011763	13011763	13011763
14	IGNITION TRANSFORMER	BRAHMA T8	65323222	65323222	65323222
15	REMOTE CONTROL SWITCH	BF3800A230	65075273	65075273	65075273
16	REMOTE CONTROL SWITCH (PUMP)	BG0910 A230	65074309	65074309	65074309
17	MOTOR THERMAL RELAY	RF38 3200 V195 24-32 A	65323104	-	65323104
		RF38 2300 V195 17-23 A	-	65323106	-
18	MOTOR THERMAL RELAY (PUMP)	Lovato RF9 2-3,3 A	65323099	-	65323099
		Lovato 11RF9 2-3,3 A	-	65074494	-
19	MAIN SWITCH	COMEPI ART.ECX1252	65324098	65324098	65324098
20	GAS/LIGHT-OIL SELECTOR	RCK 194L-E12-8751	65326257	65326257	65326257
21	RESET BUTTON	COMEPI ART.ECX1201	65324101	65324101	65324101
22	LAMP	LYVIA 10X28 BA9S	65324100	65324100	65324100
		RED LED	-	65325033	-
		GREEN LED	-	65325034	-
		YELLOW LED	-	65325044	-
23	FUSE SUPPORT	HK 520 04/1	65324279	65324279	65324279
24	RELÈ BASE	Finder 5532	65323149	65323149	65323149
25	RELÈ	Finder 5532	65323139	65323139	65323139
26	UV CELL	SIEMENS QRA 2	65320075	65320075	65320075
27	IGNITION CABLE	TC	65320947	65320947	65320947
		TL	65320947	65320947	65320947
		TL (950)	-	65325345	-
28	IGNITION ELECTRODES SET		65325222	65325222	65325222
29	PIPE	TC	65321675	65321675	65321675
		TL	65324491	65324491	65324491
		TL (950)	-	65329212	-
30	ROD	TC	65324492	65324492	65324492
		TL	65324434	65324434	65324434
		TL (950)	-	65329210	-
31	FIRING HEAD		65321676	65321676	65321676
32	FRONT DISC		65324157	65324157	65324157
33	NOZZLE HOLDER		-	-	-
34	LIGHT OIL FIRING HEAD	TC	65324494	65324494	65324494
		TL	65324769	65324769	65324769
35	BLAST TUBE	TC	65324815	65324815	65324815
		TL	65324816	65324816	65324816
		TL (950)	-	65329211	-
36	GASKET ISOMART		65321128	65321128	65321128
37	ANTIJAMMING FILTER		65323170	65323170	65323170
38	AIR DAMPER MOTOR	SIEMENS SQM50.481A2	65322902	65322902	65322902
39	SILENCER		65074538	65074538	65074538
40	OIL PUMP	SUNTEC TA4C40106	65322994	65322994	65322994
41	COUPLING		65325386	65325386	65325386
42	PUMP MOTOR	1100 W	65325356	65325356	65325356
43	OIL VALVE	LUCIFER 1/2 E321H25-4270	65323633	65323633	65323633
44	COIL	LUCIFER 1/2 E321H25-4270	65323810	65323810	65323810
45	OIL VALVE	LUCIFER 1/2 E321H25-4270	65323633	65323633	65323633
46	COIL	LUCIFER 1/2 E321H25-4270	65323810	65323810	65323810
47	OIL FILTER	MOD.70501/03 GR.	65324103	65324103	65324103
48	HOSES	TN 18X1500	65323182	65323182	65323182
49	MANOMETER	CEWAL R1/4 D50-40BAR	65324105	65324105	65324105
50	PILOT GAS VALVE	BRAHMA EG12SR GFD	65323595	65323595	65323595
51	COIL	BRAHMA	65323707	65323707	65323707
52	GAS GOVERNOR	1/2 FG1B 15	65325207	65325207	65325207
53	RELAY	Finder 5534	65323140	65323140	65323140
54	RELAY BASE	Finder 5534	65323150	65323150	65323150
55	CHECK VALVE	ART. FZVR10 3/8	65325066	65325066	65325066
56	GAS CAM GROUP		65322355	65322355	65322355
57	OIL CAM GROUP		65322356	65322356	65322356
58	INNER ASSEMBLY	TC			
		TL(950)	-	65329213	-
59	ADJUSTMENT OF OIL PRESSURE	PR80 HRC42-46 d11x20	65324304	65324304	65324304
60	THROTTLE GROUP		65325722	65325722	65325722

TC = SHORT HEAD TL = LONG HEAD

APPENDIX

Spare parts list

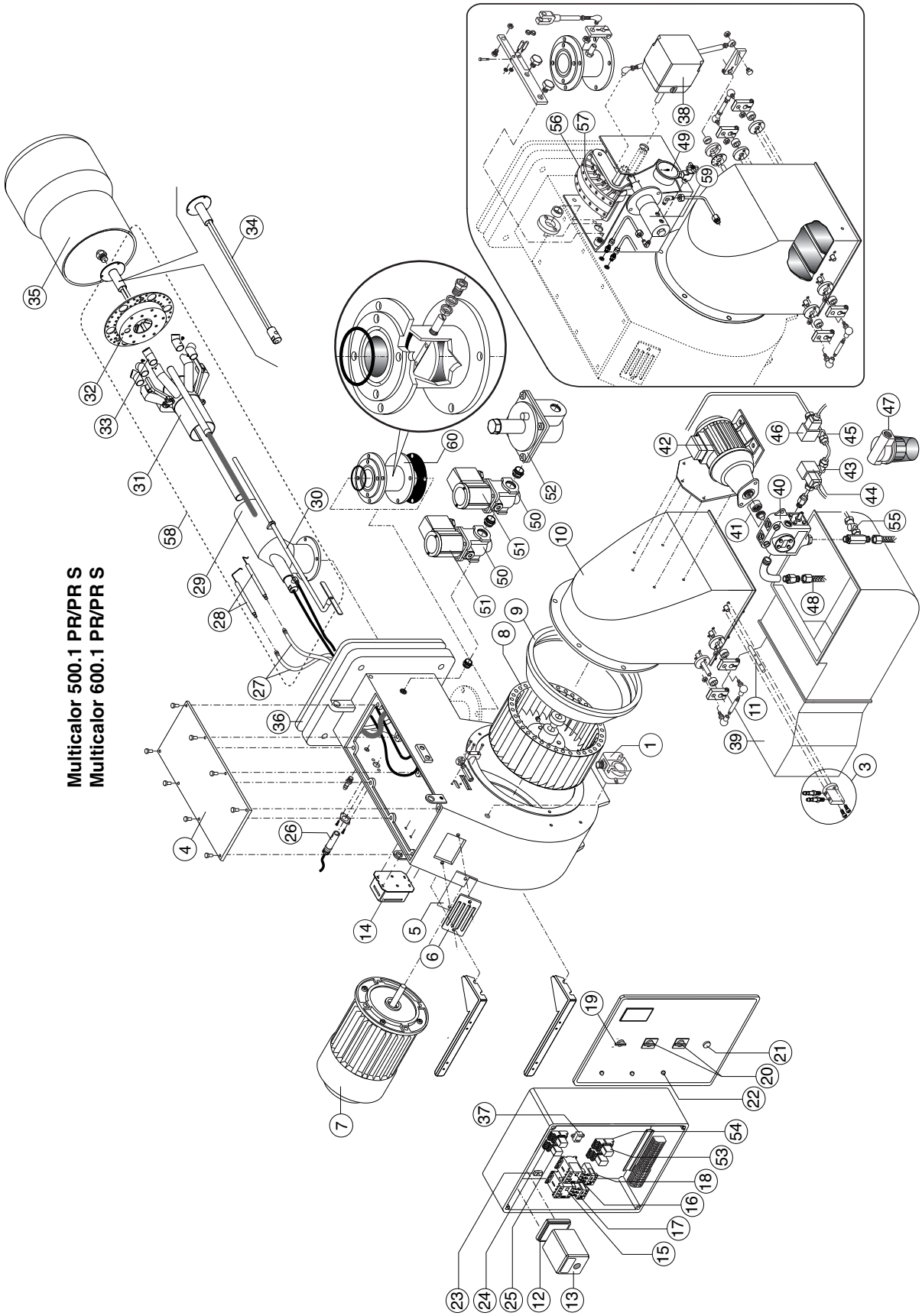

Ecoflam

APPENDIX

Spare parts list

				Multicalor 600.1 PR TL S
N°	DESCRIPTION			code: 3145773
1	AIR PRESSURE SWITCH	DUNGS LGW10 A2P		65323047
2	WIELAND PLUG	6 pin		65322072
3	AIR INTAKE SET			65322346
4	COVER			65324490
5	GLASS			65320487
6	PEED WINDOM FRAME			65320488
7	MOTOR	11 k W		-
		15 k W		65326334
8	FAN	360 x 135		-
		380 x 135		65321802
9	AIR CONVEYOR			65324264
10	AIR INTAKE			65324265
11	AIR INTAKE PIPE			65321230
12	CONTROL BOX BASE	SIEMENS		65320091
13	CONTROL BOX	SIEMENS LFL1.333		13011763
14	IGNITION TRANSFORMER	BRAHMA T8		65323222
15	REMOTE CONTROL SWITCH	BF3800A230		65075273
16	REMOTE CONTROL SWITCH (PUMP)	BG0910 A230		65074309
17	MOTOR THERMAL RELAY	RF38 3200 V195 24-32 A		65323104
18	MOTOR THERMAL RELAY (PUMP)	Lovato RF9 2-3,3 A		65323099
19	MAIN SWITCH	COMEPI ART.ECX1252		65324098
20	GAS/LIGHT-OIL SELECTOR	Lovato 7GN12F117U51		65326257
21	RESET BUTTON	COMEPI ART.ECX1201		65324101
22	LAMP	LYVIA 10X28 BA9S		65324100
		RED LED		65325033
		GREEN LED		65325034
		YELLOW LED		65325044
23	FUSE SUPPORT	HK 520 04/1		65324279
24	RELE BASE	Finder 5532		65323149
25	RELE	Finder 5532		65323139
26	UV CELL	SIEMENS QRA 2		65320075
27	IGNITION CABLE	TC		65320947
		TL		65320947
28	IGNITION ELECTRODES SET			65325222
29	PIPE	TC		65321675
		TL		65324491
30	ROD	TC		65324492
		TL		65324434
31	FIRING HEAD			840050198500
32	FRONT DISC			65324157
33	DIFFUSER	LPG		840030020501
		GN		65325795
34	LIGHT OIL FIRING HEAD	TC		65324494
		TL		65324769
35	BLAST TUBE	TC		65324815
		TL		65324816
36	GASKET ISOMART			65321128
37	ANTIJAMMING FILTER			65323170
38	AIR DAMPER MOTOR	SIEMENS SQM50.481A2		65322902
39	SILENCER			65074538
40	OIL PUMP	SUNTEC TA4C40106		65322994
41	COUPLING			65325386
42	PUMP MOTOR	1100 W		65325356
43	OIL VALVE	LUCIFER 1/2 E321H25-4270		65323633
44	COIL	LUCIFER 1/2 E321H25-4270		65323810
45	OIL VALVE	LUCIFER 1/2 E321H25-4270		65323633
46	COIL	LUCIFER 1/2 E321H25-4270		65323810
47	OIL FILTER	MOD.70501/03 GR.		65324103
48	HOSES	TN 18X1500		65323182
49	MANOMETER	CEWAL R1/4 D50-40BAR		65324105
50	PILOT GAS VALVE	BRAHMA EG12SR GFD		65323595
51	COIL	BRAHMA		65323707
52	GAS GOVERNOR	1/2 FG1B 15		65325207
53	RELAY	Finder 5534		65323140
54	RELAY BASE	Finder 5534		65323150
55	CHECK VALVE	ART. FZVR10 3/8		65325066
56	GAS CAM GROUP			65322355
57	OIL CAM GROUP			65322356
58	INNER ASSEMBLY	TC		
		TL		
59	ADJUSTMENT OF OIL PRESSURE	PR80 HRC42-46 d11x20		65324304
60	THROTTLE GROUP			65325722

TC = SHORT HEAD TL = LONG HEAD

Ecoflam Bruciatori S.p.A.
Via Roma, 64 - 31023 Resana (TV) - Italy
Tel. +39 0423 719500
Fax +39 0423 719580
http://www.ecoflam-burners.com
e-mail: export@ecoflam-burners.com
Società soggetta alla direzione e al coordinamento di Ariston Group S.p.A.
Via A. Merloni, 45 - 60044 Fabriano (AN) - CF 01026940427